TOS Series ► 6 – 30 A

- Models with 6, 10, 16 and 30 A
- Programmable output voltage from 0.75 to 5.5 VDC
- Very high efficiency up to 96 %
- Remote On/Off
- Under-voltage lockout
- Over temperature protection
- Surface mount (SM) or SIP-version
- Surface mount version fully compatible with DOSA standard

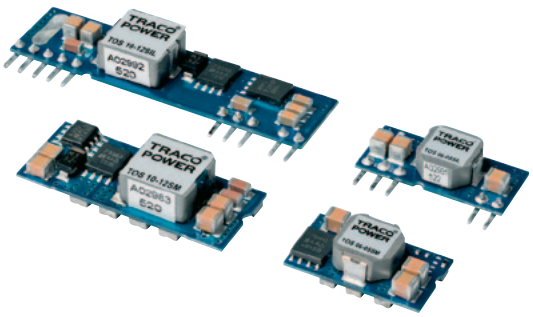

Specifications

Line regulation	0.3 % max.
Load regulation	0.4 % max.
Output voltage	programmable by external resistor
Ripple & noise	<50 mVpk-pk (with output capacitors)
Transient response time	50 µsec. typ. (50% load change)
Short circuit protection	continuous, automatic recovery
Efficiency	93 % typ.
Operating temperature range	−40 °C to +85 °C (for derating see datasheet)
I/O isolation voltage	non-isolated
Thermal protection	shutdown at 125 °C
Remote On/Off	shutdown input for low input current (3 mA) in standby operation
Full datasheet	www.tracopower.com/products/tos.pdf

Models

Order code SM-version	Input voltage range	Output voltage range	Output current max.
TOS 06-05SM	2.4 – 5.5 VDC	0.75 – 3.3 VDC	6 A
TOS 10-05SM	2.4 – 5.5 VDC	0.75 – 3.3 VDC	10 A
TOS 16-05SM	2.4 – 5.5 VDC	0.75 – 3.3 VDC	16 A
TOS 30-05SM	4.5 – 5.5 VDC	0.80 – 3.6 VDC	30 A
TOS 06-12SM	8.3 – 14.0 VDC	0.75 – 5.0 VDC	6 A
TOS 10-12SM	8.3 – 14.0 VDC	0.75 – 5.0 VDC	10 A
TOS 16-12SM	8.3 – 14.0 VDC	0.75 – 5.0 VDC	16 A
TOS 30-12SM	6.0 – 14.0 VDC	0.80 – 3.6 VDC	30 A*

* 20 A at output voltage higher than 2.75 VDC

Order code SIP-version	Input voltage range	Output voltage range	Output current max.
TOS 06-05SIL	2.4 – 5.5 VDC	0.75 – 3.3 VDC	6 A
TOS 10-05SIL	2.4 – 5.5 VDC	0.75 – 3.3 VDC	10 A
TOS 16-05SIL	2.4 – 5.5 VDC	0.75 – 3.3 VDC	16 A
TOS 30-05SIL	4.5 – 5.5 VDC	0.80 – 5.5 VDC	30 A
TOS 06-12SIL	8.3 – 14.0 VDC	0.75 – 5.0 VDC	6 A
TOS 10-12SIL	8.3 – 14.0 VDC	0.75 – 5.0 VDC	10 A
TOS 16-12SIL	8.3 – 14.0 VDC	0.75 – 5.0 VDC	16 A
TOS 30-12SIL	6.0 – 14.0 VDC	0.80 – 5.5 VDC	30 A*

* 25 A at output voltage higher than 2.75 VDC

Dimensions

6 A output Models

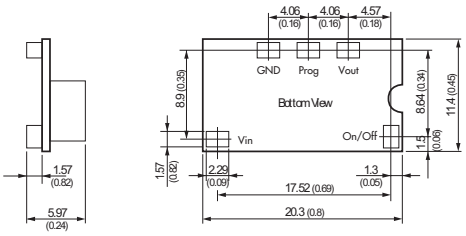

10A & 16A output models
*30A output models

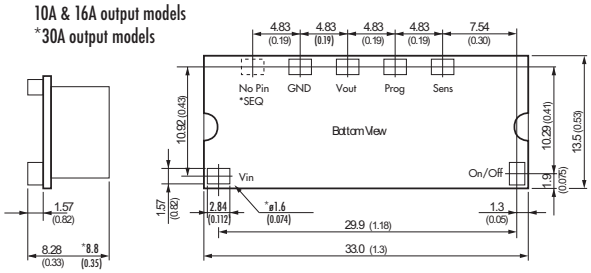

6 A output Models

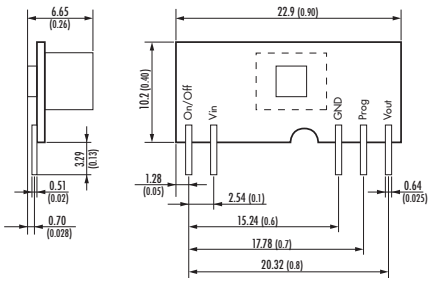

10A & 16A output models
*30A output models

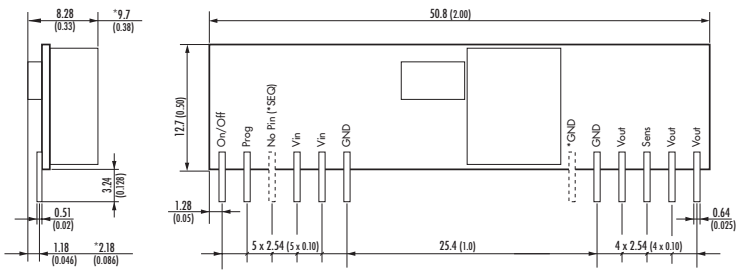

() = Inches

THV / PHV Series ► 2/5 W

- Ultra compact high voltage converter up to 2000 VDC
- Full SMD-design with ceramic capacitors for high reliability
- Very low electromagnetic interferance
- Excellent output stability
- Low temperature drift
- Remote voltage programming
- Short circuit protection
- Positive or negative output models
- PCB-mount or flying lead version
- Shielded metal casing

Specifications

Line regulation	0.03 % for THV 0.01 % for PHV
Load regulation	THV models: 0.08 % PHV models: 0.1 %
Output voltage adjustment	0...100 % (by external resistor or reference voltage)
Ripple & noise	THV: < 30 mVpk-pk (20 MHz BW) PHV: <100 mVpk-pk (20 MHz BW)
Short circuit protection	continuous
Efficiency	65 % typ.
Operating temperature range	THV models: –10 °C to +60 °C, above 50 °C derating 4 %/K PHV models: –10 °C to +50 °C, above 40 °C derating 4 %/K
Temperature coefficient	0.01 %/K
Stability	0.05 %/8 h drift
Remote On/Off	for THV 500–2,000 VDC and PHV models
Casing	metal
Full datasheet	www.tracopower.com/products/thv.pdf www.tracopower.com/products/phv.pdf

THV Models 2 Watt

Order code *	Input voltage range	Output voltage	Output current max.	Case
THV 12-180P		0 – 180 VDC	15 mA	A
THV 12-300P	10.8 – 13.2 VDC	0 – 300 VDC	10 mA	A
THV 12-350P		0 – 350 VDC	7 mA	A
THV 12-500P		0 – 500 VDC	6 mA	B
THV 12-1000P		0 – 1000 VDC	2 mA	B
THV 12-1500P	10.8 – 16.5 VDC	0 – 1500 VDC	1.3 mA	B
THV 12-2000P		0 – 2000 VDC	1 mA	B

* replace suffix P by suffix N for negative output

PHV Models 5 Watt

Order code *	Input voltage range	Output voltage	Output current max.	Case
PHV 12-350 S 10P		0 – 350 VDC	10 mA	C
PHV 12-0.5 K 1000P	10.8–16.5 VDC	0 – 500 VDC	10 mA	C
PHV 12-1.0 K 5000P		0 – 1000 VDC	5 mA	C
PHV 12-2.0 K 2500P		0 – 2000 VDC	2.5 mA	C

* replace suffix P by suffix N for negative output

Dimensions

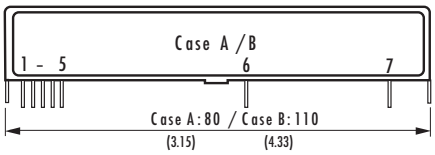

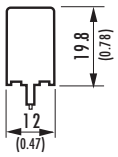

Models with flying lead connection available on request

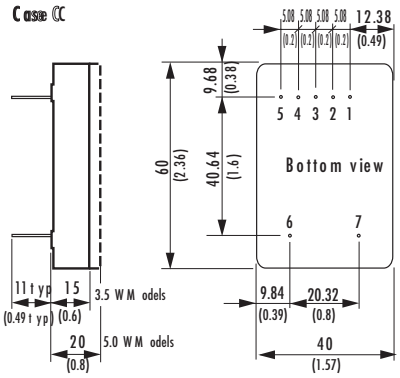

() = Inches

Pin	Case A	Case B	Case C
1	+ Vin (Vcc)	+ Vin (VCC)	+ Vin (Vcc)
2	– Vin (GND)	– Vin (GND)	– Vin (GND)
3	Vadj.	Vadj.	Vadj.
4	Vref.	Vref.	Vref.
5	No pin	Remote On/Off	Remote On/Off
6	– Vout	– Vout	– Vout
7	+ Vout	+ Vout	+ Vout

TZL Series ► 60 to 300 W

- Compact metal casing with screw terminal block
- Wide 2:1 input voltage range
- I/O isolation 1500 VDC
- Input reverse polarity protection
- Soft start, low inrush current
- Overload and short circuit protection
- Adjustable output voltage
- Cost optimized design

Specifications

Line regulation	1.0 % max.
Load regulation	1.0 % max.
Output voltage adjustment	±10 % (by internal potentiometer)
Ripple & noise	12 VDC output models: <100 mVpk-pk (20 MHz BW) 24 VDC output models: <150 mVpk-pk (20 MHz BW)
Conducted EMI	EN 55022 class B and FCC, Level B
EMC immunity	EN 61000-6-1 (light industry)
Short circuit protection	foldback, automatic recovery
Efficiency	80 % typ.
Operating temperature range	-10 °C to +60 °C above 50 °C derating 2.5 %/K
I/O isolation voltage	1500 VDC (60 sec.)
Safety standards	IEC/EN 60950-1 (no report)
Casing	aluminium / steel
Full datasheet	www.tracopower.com/products/tzl.pdf

Models

Order code	Input voltage range	Output voltage	Output current max.
TZL 060-2412	18 – 36 VDC	12 VDC	5.0 A
TZL 060-2424		24 VDC	2.5 A
TZL 060-4812	36 – 72 VDC	12 VDC	5.0 A
TZL 060-4824		24 VDC	2.5 A
TZL 100-2412	19 – 36 VDC	12 VDC	8.5 A
TZL 100-2424		24 VDC	4.2 A
TZL 100-4812	36 – 72 VDC	12 VDC	8.5 A
TZL 100-4824		24 VDC	4.2 A
TZL 150-2412	19 – 32 VDC	12 VDC	12.5 A
TZL 150-2424		24 VDC	6.3 A
TZL 150-4812	36 – 72 VDC	12 VDC	12.5 A
TZL 150-4824		24 VDC	6.3 A
TZL 300-4812	36 – 72 VDC	12 VDC	26.7 A
TZL 300-4824		24 VDC	13.4 A

Dimensions

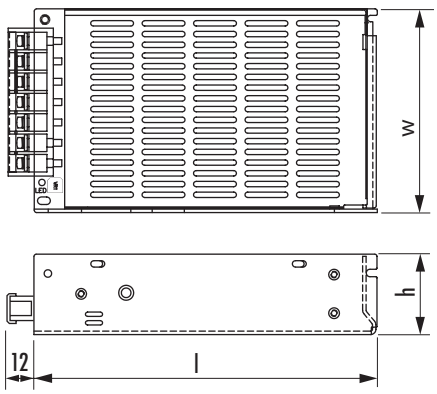

Type	Length l	Width w	Height h
TZL 060	159 (6.26)	95 (3.74)	38 (1.50)
TZL 100	198 (7.80)	95 (3.74)	38 (1.50)
TZL 150	198 (7.80)	99 (3.90)	50 (1.97)
TZL 300	212 (8.35)	115 (4.53)	50 (1.97)

() = Inch

TSC Series ► 150 to 5000 W

- Modular system for individual power solution
- Robust mechanical design for industrial applications
- Input voltages from 10 to 800 VDC
- Input under voltage lockout
- Standard models with output voltages up to 400 VDC
- Also AC input 115/230 VAC or 400/480 VAC 3P available
- EMI complies with EN 55022, class A
- Available with many options

Specifications

Line regulation	0.1 % max.
Load regulation	0.2 % max.
Ripple & noise	<1 % Vout + 30 mVpk-pk (20 MHz BW)
Conducted EMI	EN 55022, Class A
Short circuit protection	continuous, automatic recovery
Overvoltage protection	105 % of Vout (factory adjustable)
Efficiency	85 % typ.
Operating temperature range	−20 °C to +75 °C
I/O isolation voltage	2100 VDC (Vin < 60 VDC) 3500 VDC (Vin > 60 VDC & VAC input models)
Safety standards	IEC/EN 60950-1 (no report)
Full datasheet	www.tracopower.com/products/tsc.pdf

Models

Input voltage range	Output power	Output voltage range
10 – 16 VDC **18 – 36 VDC** **36 – 75 VDC** **80 – 160 VDC** **160 – 320 VDC** **320 – 640 VDC** **450 – 800 VDC**	Models with 150W – 5000W available	4.5 – 5.5 VDC 8 – 10 VDC 11 – 13 VDC 14 – 16 VDC 23 – 26 VDC 26 – 30 VDC 45 – 55 VDC 58 – 68 VDC 100 – 130 VDC 200 – 250 VDC 380 – 400 VDC

Other input and output voltages on demand

Options (examples):

- Inrush current limiting
- Input voltage: 115/230 VAC, single phase or 200/400/480 VAC, three phase
- Input polarity protection
- Output decoupling diode for redundant / parallel operation
- Active current sharing for parallel operation
- Remote On/Off (inhibit)
- Output programmable via analogue signal
- Monitoring of input an output voltage
- RS232 or IEEE488 interface
- Increased mechanical strength
- Tropical protection

for model selection visit TRACOPOWER website

4 Package styles available

Rack mount

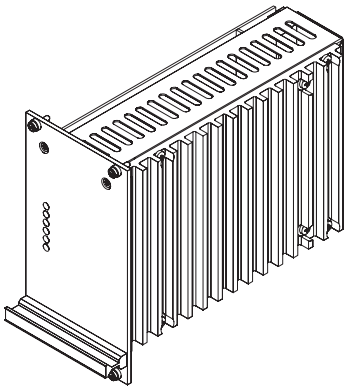

Wall mount

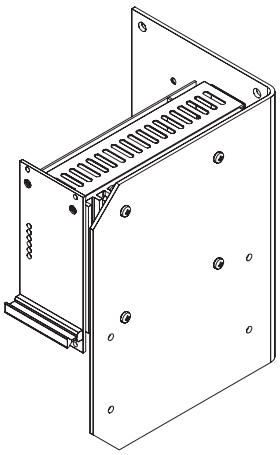

DIN rail mount

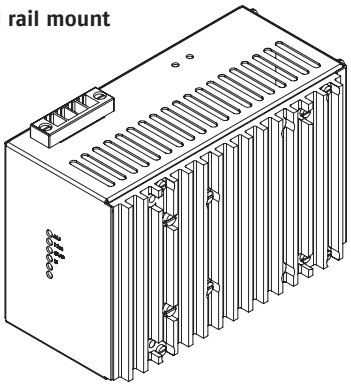

Chassis mount

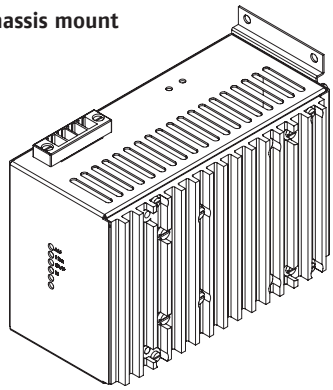

For higher power modules DIN rail mount and chassis mount might not be suitable because of static reasons (weight)

TSC 19" Series ► 5 to 22 kW

- Modular system for individual power solution
- Robust mechanical design for industrial applications
- Input voltages from 20 to 800 VDC
- Standard models with output voltages up to 800 VDC
- Also AC input 115/230 VAC or 400/480 VAC 3P available
- EMI complies with EN 55022, Class A
- Available with many options

Specifications

Line regulation	0.1 % max.
Load regulation	0.2 % max.
Ripple & noise	0.5 % Vmrs
Conducted EMI	EN 55022-A
Noise Immunity	EN 50082
Short circuit protection	continuous, automatic recovery
Overvoltage protection	105 % of Vout
Efficiency	90 % typ.
Operating temperature range	−10 °C to +50 °C
I/O isolation voltage	2100 VDC (Vin < 60 VDC) 3500 VDC (Vin > 60 VDC & VAC input models)
Safety standards	IEC/EN 60950-1
Full datasheet	www.tracopower.com/products/tsc.pdf

Models

Input voltage range	Output power	Output voltage range
40 – 64 VDC **50 – 80 VDC** **80 – 160 VDC** **160 – 320 VDC** **320 – 640 VDC** **450 – 800 VDC**	Models with 5 kW – 22 kW available	4.5 – 5.5 VDC 8 – 10 VDC 11 – 13 VDC 14 – 16 VDC 23 – 26 VDC 26 – 30 VDC 45 – 55 VDC 58 – 68 VDC 100 – 130 VDC 200 – 250 VDC 380 – 400 VDC 570 – 600 VDC 760 – 800 VDC
Other input and output voltages on demand		

Options (examples):

- Input voltage: 115/230 VAC, single phase or 200/400/480 VAC, three phase
- Input polarity protection
- Output decoupling diode for redundant / parallel operation
- Active current sharing for parallel operation
- Remote On/Off (inhibit)
- Output programmable via analogue signal
- Monitoring of input an output voltage
- RS232 or IEEE488 interface
- Wall mounting
- Increased mechanical strength
- Automatic/manual setting of output characteristic
- Temperature compensated battery charging voltage
- Digital Volt- and Ampere meter
- Tropical protection

for model selection visit TRACOPOWER website

Dimensions

Power [kW]	Width [mm]	Depth [mm]	Heigth [mm]
5/7.5/10	19"	600	178 (4U)
6/8/12	19"	360/460*	267/400 (6/9U)
22	19"	600	356 (8U)

*** depending on output current**

TSD Series ► 200 VA to 30 kVA

- True sine wave output (40–400 Hz)
- 19" subracks or plug-in modules for 19" subrack
- Single phase or 3-phase output
- DC input 10 – 800 VDC
- AC input (for frequency conversion)
- Isolation between input and output
- Compact and robust design for industrial environment
- Low standby power consumption

Specifications

Line regulation	0.1 % to 2 % depending on model
Load regulation	1 % typ.
Harmonic distortion	3 % typ.
EMC suppression	EN 55022, Class A
EMC immunity	according to EN 61000-6-2
Output current limitation (steady state)	at 105 % of Iout max.
Short circuit current	electronically limited to 3x Iout max.
Surge power	2 x Pnom. for 1 sec.
Efficiency	75–94 %
No-load input power	20 Watt typ.
Operating temperature	–20 °C to +75 °C above 55 °C derating 2.5 %/K
I/O isolation voltage	3000 VDC
Safety standards	IEC/EN60950-1
Full datasheet	www.tracopower.com/products/tsd.pdf

Models

Input voltage range	Output power	Output voltage
10 – 16 VDC 20 – 32 VDC 40 – 64 VDC 50 – 80 VDC 80 – 160 VDC 160 – 320 VDC 340 – 400 VDC 340 – 640 VDC 450 – 800 VDC	**Inverte** models with 200 VA – 30 kVA	Single-phase 115/230 VAC Three-phase 200/400/480 VAC
	Other input and output voltages on demand	
Single-phase 115/230 VAC Three-phase 200/400/480 VAC	**Frequency converter** models with 600 VA – 36 kVA	Single-phase 115/230 VAC Three-phase 200/400/480 VAC

Options (examples):

- Inrush current limiting
- Input polarity protection
- Remote On/Off (inhibit)
- Output programmable via analog signal
- Monitoring of input and output voltage
- RS232 or IEEE488 interface
- Wall mounting
- Increased mechanical strength
- Tropical protection
- Static Switch for uninterruptible power supply

Dimensions

Models with 1-phase output

Power [kVA]	Depth [mm]	Width [mm]	Height [mm]
up to 0.6	160	213	267 (6U)
up to 1.2	220		
up to 1.6		284	
up to 2.5	300		
up to 10	460	19"	

19" = 483 mm

Models with 3-phase output

Power [kVA]	Depth [mm]	Width [mm]	Height [mm]
0.6–10	460	19"	267 (6U)
up to 30			267 (3x 6U)

* for low input voltages there will be less power in relation to the size

° for power ratings >3.6 kVA the transformer needs to be installed externally because of weight and size

TOP-60 Series ► 60 W

CE CB Scheme UL 60950-1

- 4.0" x 2.0" footprint
- Supplies 60 W with convection cooling
- Single-, dual- and triple output models
- Operating temperature range −10 °C to +70 °C
- Universal input 90−264 VAC
- Compliance with EN 61000-3-2

Specifications

Input voltage range	90−264 VAC, 47−63 Hz
Line regulation	1.0 % max.
Load regulation	2.0 % max. for single output models 3.0 % max. for multi output models
Ripple & noise (20 MHz BW)	<100 mVpk-pk for 3.3 and 5 VDC models <120 mVpk-pk for other models
EMI emission	EN 55011/22 class B, harmonic current EN 61000-3-2
EMC immunity	EN 61000-6-1
Output current limitation	>110 % of Iout max.
Efficiency	85 % typ.
Overvoltage protection	>110 % of Vout nom.
Operating temperature	−10 °C to +70 °C (convection cooling) derating 2.0 %/K above 50 °C,
Safety standards / approvals	cUL/UL 60950-1, IEC/EN 60950-1 CB-report
Degree of protection	class I
Full datasheet	www.tracopower.com/products/top60.pdf

Models

Order code	Output power max.	Output 1	Output 2/3
TOP 60105	55 W	5.0 VDC / 11.0 A	
TOP 60112	60 W	12 VDC / 5.0 A	
TOP 60115	64 W	15 VDC / 4.3 A	
TOP 60124	64 W	24 VDC / 2.7 A	
TOP 60148	64 W	48 VDC / 1.35 A	
TOP 60252	55 W	+5.0 VDC / 6.0 A 1)	+12 VDC / 3.0 A
TOP 60254	55 W	+5.0 VDC / 6.0 A 1)	+24 VDC / 1.5 A
TOP 60522	55 W	+5.0 VDC / 6.0 A 1)	+12 VDC / 3.0 A −12 VDC / 0.5 A
TOP 60533	55 W	+5.0 VDC / 6.0 A 1)	+15 VDC / 2.4 A −15 VDC / 0.5 A
TOP 60316	38 W	+3.3 VDC / 6.0 A 1)	+5.2 VDC / 3.0 A +12 VDC / 0.5 A
TOP 60317	38 W	+5.0 VDC / 6.0 A 1)	+3.3 VDC / 1.5 A +12 VDC / 0.5 A
TOP 60318	55 W	+5.0 VDC / 6.0 A 1)	+24 VDC / 1.5 A −12 VDC / 0.5 A

1) 8.0 A peak current for max. 10 sec. or with forced air cooling
Total power of multi output models not to exceed nominal power

Dimensions

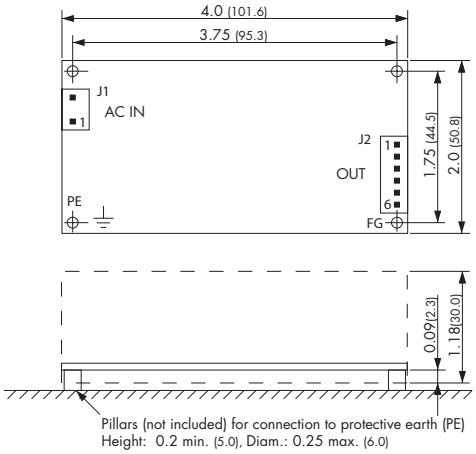

() = mm

TOP-100 Series ► 100 W

- High power density in 4.0" x 2.0" footprint
- Full load operation up to +50°C with convection cooling
- Highest efficiency of 90% typ.
- Operating temperature range −25 °C to +70 °C
- Compliance with EN 61000-3-2
- Safety class I and class II

Specifications

Input voltage range	90–132 VAC / 187–264 VAC (autorange) 47-63 Hz
Line regulation	0.5 % max.
Load regulation	1.0 % max.
Output voltage adjustment	approx. +5 % of Vout nom. by internal potentiometer
Ripple & noise (20 MHz BW)	<100 mVpk-pk <200 mVpk-pk for 48 V models
EMI emission	EN 55011/22 class B, harmonic current EN 61000-3-2
EMC immunity	EN61000-6-1
Output current limitation	>125% Inom. foldback, automatic recovery
Efficiency	90 % typ.
Operating temperature	−25 °C to +70 °C (convection cooling) derating 2.0 %/K above 50 °C, for 3.3 & 5.0 VDC models: 2.0 %/K above 40 °C
Safety standards / approvals	cUL/UL 60950-1, IEC/EN 60950-1, CB-report
Degree of protection	class I, class II prepared with second fuse
Full datasheet	www.tracopower.com/products/top100.pdf

Models

Order code	Output power max.	Output voltage	Output current max.
TOP 100-103	66 W	3.3 VDC	20 A
TOP 100-105		5 VDC	20 A
TOP 100-112		12 VDC	8.3 A
TOP 100-115	100 W	15 VDC	6.7 A
TOP 100-124		24 VDC	4.2 A
TOP 100-148		48 VDC	2.1 A

Dimensions

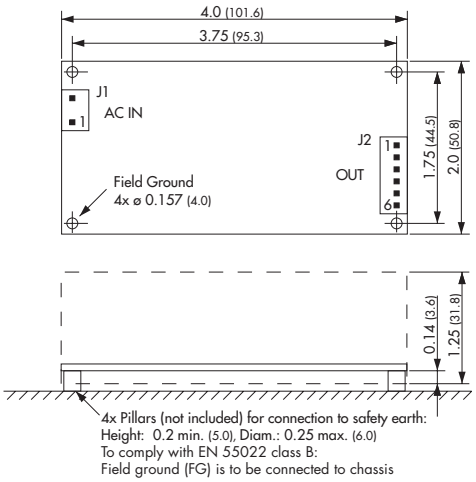

() = mm

TOP-200 Series ► 200 W

CE CB Scheme UL 60950-1

- Highest power density in 5.0" x 3.0" footprint
- Supplies 200 W (without fan!)
- Highest efficiency of 90% typ.
- Operating temperature range −25 °C to +70 °C
- Universal input 85−264 VAC
- Compliance with EN 61000-3-2
- Protection class I and class II

Specifications

Input voltage range	85−264 VAC, 47−63 Hz
Line regulation	0.5 % max.
Load regulation	1.0 % max.
Ripple & noise (20 MHz BW)	<120 mVpk-pk for other models <150 mVpk-pk for 48 VDC models
EMI emission	EN 55011/22 class B, harmonic current EN 61000-3-2
EMC immunity	EN 61000-6-1
Output current limitation	>110 % of Iout max.
Efficiency	90 % typ.
Overvoltage protection	>130 % of Vout nom.
Operating temperature	−25 °C to +70 °C (convection cooling) derating 2.0 %/K above 40°C for 12 & 15 VDC models derating 2.0 %/K above 50°C for 24 & 48 VDC models
Safety standards / approvals	cUL/UL 60950-1, IEC/EN 60950-1, CB-report
Degree of protection	class I, class II prepared
Full datasheet	www.tracopower.com/products/top200.pdf

Models

Order code	Output power max.	Output voltage	Output current max.
TOP 200-112		12 VDC	16 A
TOP 200-115	200 W	15 VDC	13 A
TOP 200-124		24 VDC	8.3 A
TOP 200-148		48 VDC	4.2 A

Dimensions

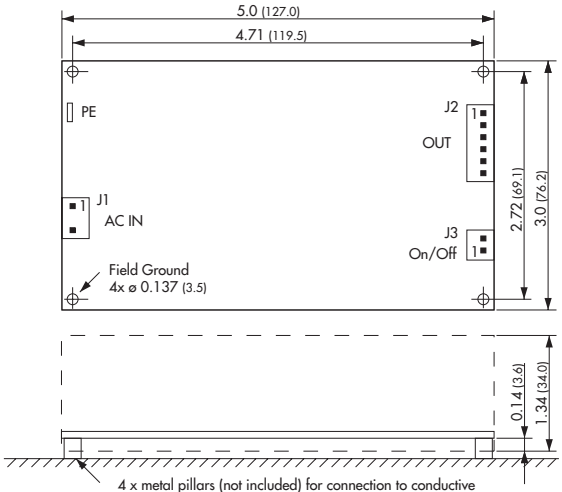

() = mm

4 x metal pillars (not included) for connection to conductive plate in order to meet EN55022 class B
Minimum height: 0.2 (5.0), max. diameter: 0.25 (6.0)

TOF Series ► 10 to 150 W

CE CB Scheme cULus UL 60950-1

- High industrial quality standard
- Optional available with case
- Screw terminal or pin connector version
- Universal input voltage 85–264 VAC
- Output voltage adjustable
- Short circuit and overvoltage protection

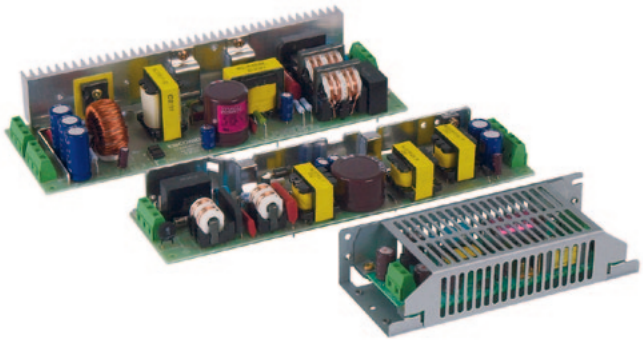

Specifications

Input voltage range	85–264 VAC, 47–63 Hz 110–370 VDC (10–50 Watt models only)
Line regulation	0.5 % max.
Load regulation	0.5 % max.
Output voltage adjustment:	±5 % for 10–50 Watt models ±10 % for 75–150 Watt models
Ripple & noise	<1 % Vout + 50mVpk-pk (20 MHz BW)
EMI suppression	EN55022, class B and FCC part 15, level B IEC/EN61000-3-2, (75–150 Watt models)
EMC immunity	EN61000-6-1
Output current limitation	>105 % of Inom.
Efficiency	78 % typ.
Operating temperature	–10 °C to +60 °C above 50 °C derating 5.0 %/K
Safety standards / approvals	cUL/UL 60950-1, IEC/EN60950-1, CB-report
Connection	- screw terminal block - Pin connector – suffix M (mating connectors included)
Full datasheet	www.tracopower.com/products/tof.pdf

Models

Order code *	Output power max.	Output voltage	Output current max.	Peak current 10 sec. max.
TOF 10-05S		5 VDC	2 A	
TOF 10-12S	10 Watt	12 VDC	0.9 A	
TOF 10-15S		15 VDC	0.7 A	
TOF 10-24S		24 VDC	0.5 A	
TOF 15-05S		5 VDC	3 A	
TOF 15-12S	15 Watt	12 VDC	1.3 A	
TOF 15-15S		15 VDC	1 A	
TOF 15-24S		24 VDC	0.7 A	
TOF 30-05S		5 VDC	6 A	
TOF 30-12S	30 Watt	12 VDC	2.5 A	
TOF 30-15S		15 VDC	2 A	
TOF 30-24S		24 VDC	1.3 A	
TOF 50-05S		5 VDC	10 A	
TOF 50-12S	50 Watt	12 VDC	4.3 A	
TOF 50-15S		15 VDC	3.5 A	
TOF 50-24F		24 VDC	2.2 A	3.0 A
TOF 75-05S		5 VDC	15 A	
TOF 75-12S	75 Watt	12 VDC	6.3 A	
TOF 75-15S		15 VDC	5 A	
TOF 75-24F		24 VDC	3.2 A	4.5 A
TOF 100-05S		5 VDC	20 A	
TOF 100-12S	100 Watt	12 VDC	8.5 A	
TOF 100-15S		15 VDC	6.7 A	
TOF 100-24F		24 VDC	4.5 A	6.3 A
TOF 150-05S		5 VDC	30 A	
TOF 150-12S	150 Watt	12 VDC	12.5 A	
TOF 150-15S		15 VDC	10 A	
TOF 150-24F		24 VDC	6.5 A	9.1 A

* Version with Pin connectors - add suffix M

Dimensions

Type	Length L1	Width W1	Height H1	Length L2	Width W2	Height H2
TOF 10	105 (4.13)	50 (1.97)	20 (0.79)	125 (4.92)	57 (2.24)	32 (1.26)
TOF 15	125 (4.92)	50 (1.97)	20 (0.79)	145 (4.92)	57 (2.24)	32 (1.26)
TOF 30	133 (5.24)	55 (2.17)	25 (0.98)	163 (6.42)	65 (2.56)	36 (1.42)
TOF 50	195 (7.68)	55 (2.17)	25 (0.98)	225 (8.86)	65 (2.56)	36 (1.42)
TOF 75	222 (8.74)	55 (2.17)	26 (1.02)	252 (9.92)	65 (2.56)	42 (1.65)
TOF 100	222 (8.74)	62 (2.44)	32 (1.26)	252 (9.92)	72 (2.83)	45 (2.00)
TOF 150	222 (8.74)	75 (2.95)	37 (1.46)	252 (9.92)	85 (3.35)	51 (2.00)

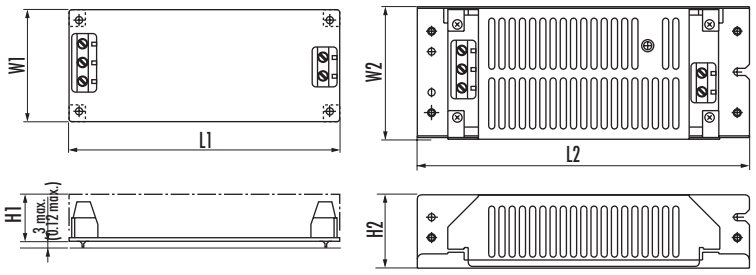

() = Inches

Chassis / cover kit

Order code	for models
TOF 10-MC	TOF 10-xx
TOF 15-MC	TOF 15-xx
TOF 30-MC	TOF 30-xx
TOF 50-MC	TOF 50-xx
TOF 75-MC	TOF 75-xx
TOF 100-MC	TOF 100-xx
TOF 150-MC	TOF 150-xx

TMS Series ► 6 to 25 W

CE CB Scheme cULus UL 60950-1

- Miniature encapsulated power supplies
- 3 package styles available:
  - for PCB mount with solder pins
  - for chassis mount with FASTON-tabs
  - for chassis mount with screw terminal block
- Universal input 85–264 VAC
- EMI meets 55022, class B
- Short circuit protection

Specifications

Input voltage range	85–264 VAC, 47–63 Hz 110–375 VDC
Line regulation	0.4 % max.
Load regulation	1.0 % max. for single output models 2.0 % max. for dual output models
Ripple & noise	<100 mVpk-pk (20 MHz BW)
EMI suppression	EN 55011 class B, EN 55022 class B and FCC, level B
EMC immunity	EN61000-6-1
Output current limitation	>130 % Iout max., foldback, automatic recovery
Efficiency	78 % typ.
Operating temperature	–25 °C to +60 °C above 50 °C derating 5 %/K 5 Vout models: above 40 °C derating 2.5 %/K
Safety standards / approvals	cUL/UL 60950-1, IEC/EN 60950-1 CB-report
Degree of protection	safety class I
Casing	plastic (UL 94V-0 rated)
Full datasheet	www.tracopower.com/products/tms.pdf

Models

Order code*	Output power	Output 1	Output 2
TMS 06105		5 VDC / 1200 mA	
TMS 06112		12 VDC / 500 mA	
TMS 06115	6 W	15 VDC / 400 mA	
TMS 06124		24 VDC / 250 mA	
TMS 06212		+12 VDC / 250 mA	–12 VDC / 250 mA
TMS 06215		+15 VDC / 200 mA	–15 VDC / 200 mA
TMS 10105		5 VDC / 2000 mA	
TMS 10112		12 VDC / 900 mA	
TMS 10115	10 W	15 VDC / 700 mA	
TMS 10124		24 VDC / 450 mA	
TMS 10212		+12 VDC / 450 mA	–12 VDC / 450 mA
TMS 10215		+15 VDC / 350 mA	–15 VDC / 350 mA
TMS 15105		5 VDC / 3000 mA	
TMS 15112		12 VDC / 1300 mA	
TMS 15115	15 W	15 VDC / 1000 mA	
TMS 15124		24 VDC / 650 mA	
TMS 15212		+12 VDC / 650 mA	–12 VDC / 650 mA
TMS 15215		+15 VDC / 500 mA	–15 VDC / 500 mA
TMS 25105		5 VDC / 4600 mA	
TMS 25112		12 VDC / 2000 mA	
TMS 25115	25 W	15 VDC / 1600 mA	
TMS 25124		24 VDC / 1000 mA	
TMS 25212		+12 VDC / 1000 mA	–12 VDC / 1000 mA
TMS 25215		+15 VDC / 800 mA	–15 VDC / 800 mA

* For PCB mount version – no suffix
For chassis mount with Faston-Tabs add suffix F (not for 6 W models)
For chassis mount with screw terminal block add suffix C (not for 6 & 10W models)

Dimensions

PCB mount version (no suffix)

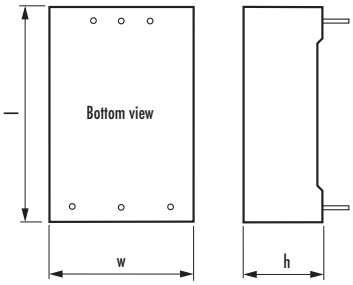

Chassis mount with Faston-tabs (suffix F)

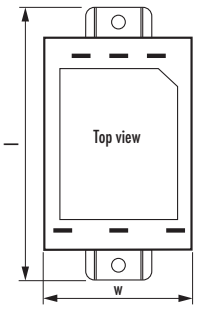

Chassis mount with screw terminal block (suffix C)

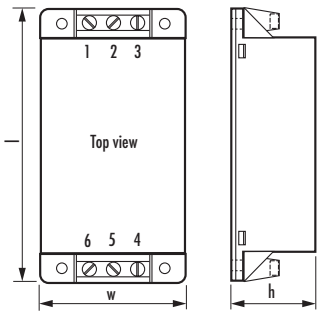

Type	Length l	Width w	Height h
TMS 06	50 (1.97)	40 (1.57)	20 (0.79)
TMS 10	55 (2.17)	45 (1.77)	24 (0.94)
TMS 15	64 (2.52)	45 (1.77)	24 (0.94)
TMS 25	76 (2.99)	51 (2.01)	28 (1.10)
TMS 10F	75 (2.95)	45 (1.77)	24 (0.94)
TMS 15F	84 (3.31)	45 (1.77)	24 (0.94)
TMS 25F	96 (3.78)	51 (2.01)	29 (1.14)
TMS 15C	84 (3.31)	45 (1.77)	26.5 (1.04)
TMS 25C	96 (3.78)	51 (2.01)	29.5 (1.16)

() = Inch

TMP & TMPM Series ► 4 to 10 W

CE CB Scheme c UL us UL 60950-1

- Fully encapsulated low profile plastic casing
- Single and dual output models
- Meets ERP directive (green mode), <0.3 W no load power consumption, high efficiency across full load range
- Universal input 85–264 VAC, 47–440 Hz
- Protection against short circuit, overload and over-temperature
- EMI meets 55022, class B

Specifications

Input voltage range	85–264 VAC, 47–440 Hz 120–370 VDC
Line regulation	1.0 % max. 3.0 % typ. output 2
Load regulation	1.0 % typ. output 1 2.5 % typ. output 2
Ripple & noise (20 MHz BW)	<1.8 % of Vout nom. for 3.3 & 5 VDC outputs <1.0 % of Vout nom. for other outputs
EMI suppression	EN 55022 class B and FCC, level B
EMC immunity	EN61000-6-2
Output current limitation	>105% Inom. foldback, automatic recovery
Efficiency	78 % typ.
Operating temperature	–25 °C to +60 °C above 40 °C derating 2.5 %/K
Safety standards / approvals	cUL/UL 60950-1, IEC/EN 60950-1, CB-report,
Degree of protection	safety class II prepared
Casing	plastic (UL 94V-0 rated)
Full datasheet	www.tracopower.com/products/tmp.pdf

Models

Order code	Output power	Output 1	Output 2
TMPM 04103		3.3 VDC / 1200 mA	
TMPM 04105		5.0 VDC / 800 mA	
TMPM 04109		9.0 VDC / 444 mA	
TMPM 04112		12 VDC / 333 mA	
TMPM 04115	4 W	15 VDC / 267 mA	
TMPM 04124		24 VDC / 167 mA	
TMPM 04212		+12 VDC / 166 mA	–12 VDC / 166 mA
TMPM 04215		+15 VDC / 133 mA	–15 VDC / 133 mA
TMPM 04253		+5.0 VDC / 600 mA	+3.3 VDC / 150 mA
TMPM 04225		+12 VDC / 250 mA	+5.0 VDC / 120 mA
TMP 07103	4.6 W	3.3 VDC / 1400 mA	
TMP 07105		5.0 VDC / 1400 mA	
TMP 07112	7 W	12 VDC / 585 mA	
TMP 07115		15 VDC / 465 mA	
TMP 07124		24 VDC / 290 mA	
TMPM 10103	8.6 W	3.3 VDC / 2500 mA	
TMPM 10105		5.0 VDC / 2000 mA	
TMPM 10112	10 W	12 VDC / 830 mA	
TMPM 10115		15 VDC / 665 mA	
TMPM 10124		24 VDC / 415 mA	
TMP 10103	6.6 W	3.3 VDC / 2000 mA	
TMP 10105		5.0 VDC / 2000 mA	
TMP 10112		12 VDC / 830 mA	
TMP 10115	10 W	15 VDC / 665 mA	
TMP 10124		24 VDC / 415 mA	
TMP 10212		+12 VDC / 380 mA	–12 VDC / 380 mA
TMP 10215		+15 VDC / 300 mA	–15 VDC / 300 mA

Dimensions

TMPM 04 Models:

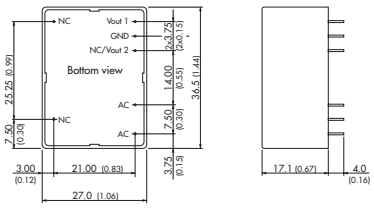

TMP 07 Models:

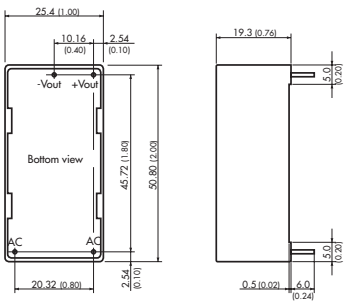

TMPM 10 Models:

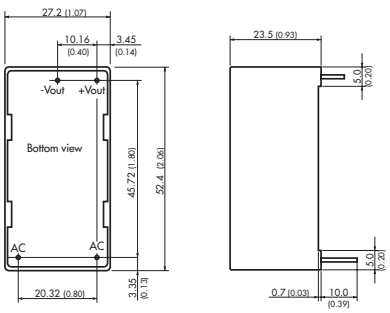

TMP 10 Models:

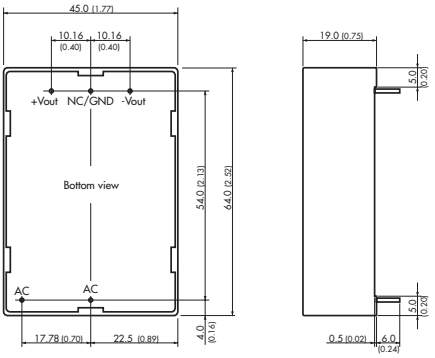

() = Inches

TMP Series ► 15 to 60 W

CB Scheme · UL 60950-1 · UL 508

- Fully encapsulated low profile plastic case
- 2 package styles available:
  - For PCB mount with solder pins
  - For chassis mount with screw terminal block
- Optional DIN-rail mount adapter
- Single-, dual- and triple output models
- Universal input 85–264 VAC, 47–440 Hz
- Safety class II prepared
- EMI meets 55022, class B
- Protection against short circuit, overload and over-temperature

Specifications

Input voltage range	85–264 VAC, 47–440 Hz (47-63 Hz for 60 W models) 120-370 VDC
Line regulation	1.0 % max.
Load regulation	1.0 % typ. output 1 3.0 % typ. output 2 & 3
Ripple & noise (20 MHz BW)	<2% of Vout nom. for 5 VDC outputs <1.3 % of Vout nom. for other outputs
EMI suppression	EN 55011 class B, EN 55022 class B and FCC, level B
EMC immunity	EN61000-6-1
Output current limitation	>105% Inom. foldback, automatic recovery
Efficiency	80 % typ.
Operating temperature	−25 °C to +65 °C above 50 °C derating 3.3 %/K
Safety standards / approvals	cUL/UL 60950-1, IEC/EN 60950-1, UL 508 (single output and symetric dual output models only), CB-report
Degree of protection	safety class II prepared
Casing	plastic (UL 94V-0 rated)
Option	DIN-rail mount adapter
Full datasheet	www.tracopower.com/products/tmp.pdf

Models

Order code*	Output power	Output 1	Output 2/3
TMP 15105		5.0 VDC / 3000 mA	
TMP 15112		12 VDC / 1250 mA	
TMP 15115		15 VDC / 1000 mA	
TMP 15124		24 VDC / 625 mA	
TMP 15148	15 W	48 VDC / 310 mA	
TMP 15212		+12 VDC / 650 mA	-12 VDC / 650 mA
TMP 15215		+15 VDC / 500 mA	-15 VDC / 500 mA
TMP 15252		+5.0 VDC / 1500 mA	+12 VDC / 625 mA
TMP 15512		+5.0 VDC / 2000 mA	+12 VDC / 200 mA -12 VDC / 200 mA
TMP 15515		+5.0 VDC / 2000 mA	+15 VDC / 150 mA -15 VDC / 150 mA
TMP 30105		5.0 VDC / 6000 mA	
TMP 30112		12 VDC / 2500 mA	
TMP 30115		15 VDC / 2000 mA	
TMP 30124		24 VDC / 1250 mA	
TMP 30148		48 VDC / 625 mA	
TMP 30212		+12 VDC / 1300 mA	-12 VDC / 1300 mA
TMP 30215		+15 VDC / 1000 mA	-15 VDC / 1000 mA
TMP 30252		+5.0 VDC / 3000 mA	+12 VDC / 1250 mA
TMP 30512	30 W	+5.0 VDC / 3000 mA	+12 VDC / 600 mA -12 VDC / 600 mA
TMP 30515		+5.0 VDC / 3000 mA	+15 VDC / 500 mA -15 VDC / 500 mA
TMP 30522		+5.0 VDC / 1500 mA	+12 VDC / 1000 mA -12 VDC / 250 mA
TMP 30316		+3.3 VDC / 4000 mA	+5.0 VDC / 1500 mA +12 VDC / 250 mA
TMP 30317		+5.0 VDC / 4500 mA	+3.3 VDC / 1000 mA +12 VDC / 250 mA
TMP 60105		5.1 VDC / 10'000 mA	
TMP 60112		12 VDC / 5000 mA	
TMP 60115	60 W	15 VDC / 4000 mA	
TMP 60124		24 VDC / 2500 mA	
TMP 60136		36 VDC / 1670 mA	
TMP 60148		48 VDC / 1250 mA	

* For chassis mount version add suffix C

Dimensions

	Type	Length l	Width w	Height h
PCB mount	TMP 15xxx	74.0 (2.91)	54.0 (2.13)	19.3 (0.76)
	TMP 30xxx	89.0 (3.50)	63.5 (2.50)	21.5 (0.85)
	TMP 60xxx	89.0 (3.50)	67.5 (2.66)	34.0 (1.34)
Chassis mount	TMP 15xxxC	96 (3.78)	54.0 (2.13)	23.3 (0.88)
	TMP 30xxxC	112 (4.41)	63.8 (2.51)	25.6 (1.01)
	TMP 60xxxC	112 (4.41)	67.8 (2.67)	38.0 (1.50)

() = Inches

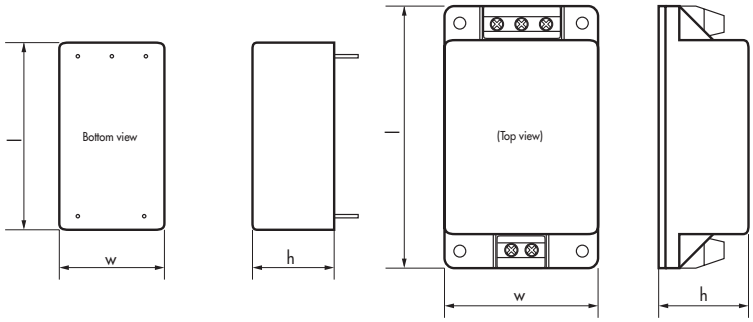

DIN-rail mount adapter

TMP-MK1	for 15 W chassis mount version
TMP-MK2	for 30 W and 60 W chassis mount versions

TMLM Series ► 4 to 20 W

LVD UL 60950-1

- Ultra compact 20 W in 2" x 1" package
- Fully encapsulated modules for PCB mount
- Universal input 90–264 VAC, 47–440 Hz
- EMI meets EN 55022, class B
- Low ripple and noise
- Short circuit and overload protection

Specifications

Input voltage range	90–264 VAC, 47–440 Hz 120–370 VDC
Line regulation	0.3 % max.
Load regulation	0.5 % typ.
Ripple & noise (20 MHz BW)	<1.0 % of Vout <1.5 % of Vout for 3.3 & 5 VDC models
EMI suppression	EN 55011 class B, EN 55022 class B and FCC, level B
EMC immunity	EN61000-6-1
Output current limitation	foldback, automatic recovery
Efficiency	78 % typ.
Operating temperature	–25 °C to +60 °C TMLM 04 models: above 50 °C derating 3.75 %/K other models: above 40 °C derating 2.5 %/K
Safety standards / approvals	cUL/UL 60950-1, EN 60950-1
Degree of protection	safety class II prepared
Casing	plastic (UL 94V-0 rated)
Full datasheet	www.tracopower.com/products/tmlm.pdf

Models

Order code	Output power	Output 1	Output 2
TMLM 04103	4 W	3.3 VDC / 1200 mA	
TMLM 04105	4 W	5.0 VDC / 800 mA	
TMLM 04109	4 W	9.0 VDC / 444 mA	
TMLM 04112	4 W	12 VDC / 333 mA	
TMLM 04115	4 W	15 VDC / 267 mA	
TMLM 04124	4 W	24 VDC / 167 mA	
TMLM 04253	3.5 W	+5.0 VDC / 600 mA	+3.3 VDC / 150 mA
TMLM 04225	3.6 W	+12 VDC / 250 mA	+5.0 VDC / 120 mA
TMLM 05103	4.1 W	3.3 VDC / 1250 mA	
TMLM 05105	5 W	5.0 VDC / 1000 mA	
TMLM 05112	5 W	12 VDC / 420 mA	
TMLM 05115	5 W	15 VDC / 330 mA	
TMLM 05124	5.5 W	24 VDC / 230 mA	
TMLM 10103	8.2 W	3.3 VDC / 2500 mA	
TMLM 10105	10 W	5.0 VDC / 2000 mA	
TMLM 10112	10 W	12 VDC / 830 mA	
TMLM 10115	10 W	15 VDC / 665 mA	
TMLM 10124	10 W	24 VDC / 420 mA	
TMLM 20103	12 W	3.3 VDC / 3600 mA	
TMLM 20105	18 W	5.0 VDC / 3600 mA	
TMLM 20112	20 W	12 VDC / 1670 mA	
TMLM 20115	20 W	15 VDC / 1330 mA	
TMLM 20124	20 W	24 VDC / 830 mA	

Dimensions

TMLM 04 Models:

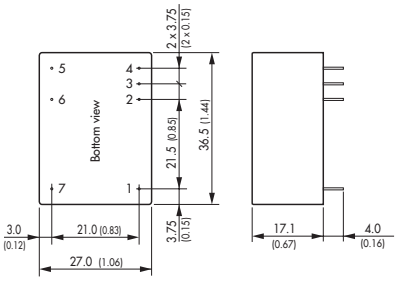

Pin	Single output	Dual output
1	No con.	No con.
2	+ Vout	Vout 1
3	– Vout	Common
4	No con.	Vout 2
5	AC	AC
6	AC	AC
7	No con.	No con.

TMLM 05 Models:

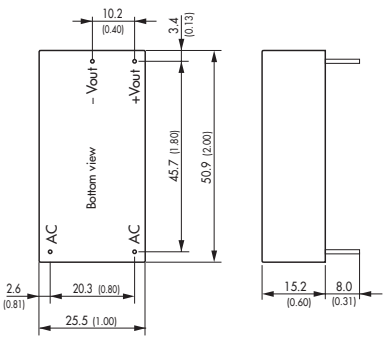

TMLM 10 Models:

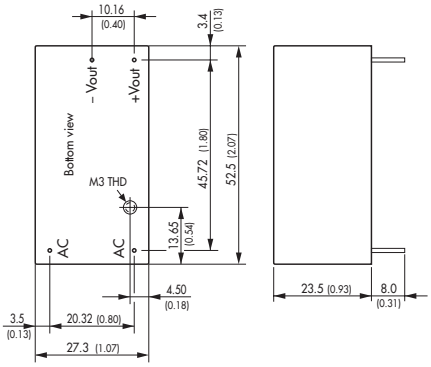

TMLM 20 Models:

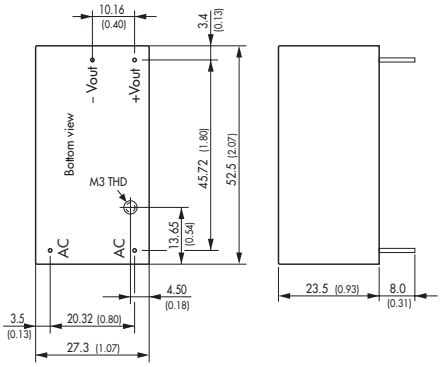

() = Inches

TML Series ► 20 to 40 W

CB Scheme
UL 60950-1

- 2 Package styles available:
  - for PCB mount with solder pins
  - for chassis mount with screw terminal block
- Single-, dual- and triple output models
- Universal input 90–264 VAC, 47–440 Hz
- Protection class I (TML 20) and class II (TML 40)
- EMI meets EN 55022, class B
- Short circuit and overload protection

Specifications

Input voltage range	90–264 VAC, 47–440 Hz 100–370 VDC
Line regulation	1.0 % max. for output 1 5.0 % max. for output 2/3
Load regulation	1.0 % max. for single output models 2.0 % max. for output 1, 7.0 % max. for output 2/3
Ripple & noise (20 MHz BW)	<1.0 % of Vout <1.5 % of Vout for 3.3 & 5 VDC models
EMI suppression	EN 55011 class B, EN 55022 class B and FCC, level B
EMC immunity	EN61000-6-1
Output current limitation	foldback, automatic recovery
Efficiency	80 % typ.
Operating temperature	–25 °C to +60 °C above 50 °C derating 4 %/K
Safety standards / approvals	cUL/UL 60950-1, IEC/EN 60950-1 CB-report
Degree of protection	safety class I (TML 40 W models safety class II)
Casing	plastic (UL 94V-0 rated)
Full datasheet	www.tracopower.com/products/tml.pdf

Models

Order code*	Output power	Output 1		Output 2/3	
TML 20103		3.3 VDC	4500 mA		
TML 20105		5 VDC	4000 mA		
TML 20112		12 VDC	1670 mA		
TML 20115		15 VDC	1340 mA		
TML 20124	20 W	24 VDC	840 mA		
TML 20205		+5 VDC	2000 mA	–5 VDC	2000 mA
TML 20212		+12 VDC	830 mA	–12 VDC	830 mA
TML 20215		+15 VDC	670 mA	–15 VDC	670 mA
TML 20512		5 VDC	2800 mA	±12 VDC	±250 mA
TML 20515		5 VDC	2800 mA	±15 VDC	±200 mA
TML 40103		3.3 VDC	8000 mA		
TML 40105		5 VDC	8000 mA		
TML 40112		12 VDC	3330 mA		
TML 40115		15 VDC	2670 mA		
TML 40124		24 VDC	1670 mA		
TML 40205	40 W	+5 VDC	4000 mA	–5 VDC	4000 mA
TML 40212		+12 VDC	1670 mA	–12 VDC	1670 mA
TML 40215		+15 VDC	1330 mA	–15 VDC	1330 mA
TML 40252		5 VDC	5000 mA	12 VDC	1250 mA
TML 40254		5 VDC	5000 mA	24 VDC	625 mA
TML 40512		5 VDC	5000 mA	±12 VDC	±600 mA
TML 40515		5 VDC	5000 mA	±15 VDC	±500 mA

* For chassis mount version add suffix C

DIN-rail mount adapter

TMP-MK1	for 20 W chassis mount version
TMP-MK2	for 40 W chassis mount version

Dimensions

PCB Mount Version

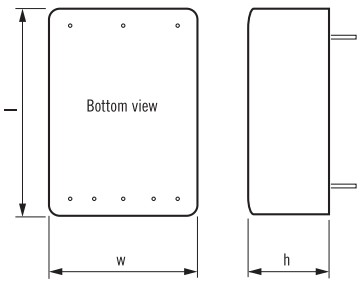

Chassis Mount with Screw Terminals

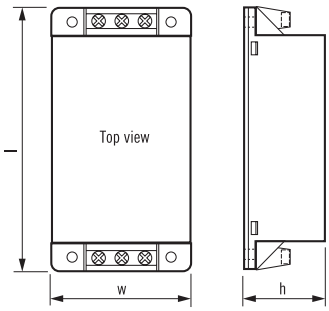

	Type	Length l	Width w	Height h
PCB mount	TML 20xxx	70.0 (2.76)	48.0 (1.89)	22.0 (0.87)
	TML 40xxx	89.0 (3.50)	63.5 (2.50)	25.0 (0.98)
Chassis mount	TML 20xxxC	96.0 (3.78)	54.6 (2.15)	27.5 (1.08)
	TML 40xxxC	112.9 (4.44)	64.7 (2.55)	31.5 (1.24)

() = Inch

TMT Series ► 10 to 50 W

CB Scheme · UL 60950-1 UL 60601-1 · UL 508

- Industrial (UL508) and medical safety approvals
- 2 packages styles available:
  - PCB mount with solder pins
  - Chassis mount with screw terminal block
- Adapter for DIN-rail mount
- Single-, dual- and triple output models
- Universal input 85 – 264 VAC
- Short circuit and overload protection

Specifications

Input voltage range	85–264 VAC, 47–63 Hz 85–370 VDC (derating below 110 VDC input)
Line regulation	0.4 % max.
Load regulation	1.0 % max. for single output models 3.0 % max. for multi output models
Ripple & noise	<150 mVpk-pk (20 MHz BW)
EMI suppression	EN 55011 class B, EN 55022 class B and FCC, level B
EMC immunity	EN 60601-1-2
Output current limitation	>105% Inom. foldback, automatic recovery
Efficiency	83 % typ.
Operating temperature	–25 °C to +50 °C above 40 °C derating 5 %/K
Safety standards / approvals	cUL/UL 60950-1, IEC/EN 60950-1, UL 60601-1, IEC/EN 60601-1, CB-report, UL 508 listed (chassis mount modules)
Degree of protection	class II prepared
Casing	plastic (UL 94V-0 rated)
Option	DIN-rail mount adapter
Full datasheet	www.tracopower.com/products/tmt.pdf

Models

Order code	Output power	Output 1	Output 2/3
TMT 10105		5 VDC / 2000 mA	
TMT 10112	10 W	12 VDC / 840 mA	
TMT 10115		15 VDC / 670 mA	
TMT 10124		24 VDC / 420 mA	
*TMT 15105		5 VDC / 3000 mA	
*TMT 15112		12 VDC / 1250 mA	
*TMT 15115	15 W	15 VDC / 1000 mA	
*TMT 15124		24 VDC / 625 mA	
*TMT 15212		+12 VDC / 625 mA	-12 VDC / 625 mA
*TMT 15215		+15 VDC / 500 mA	-15 VDC / 500 mA
*TMT 30105		5 VDC / 6000 mA	
*TMT 30112		12 VDC / 2500 mA	
*TMT 30115		15 VDC / 2000 mA	
*TMT 30124		24 VDC / 1250 mA	
*TMT 30212		+12 VDC / 1250 mA	-12 VDC / 1250 mA
*TMT 30215		+15 VDC / 1000 mA	-15 VDC / 1000 mA
*TMT 30252	30 W	5 VDC / 3000 mA	12 VDC / 1200 mA
*TMT 30522		5 VDC / 3000 mA	12 VDC / 1000 mA 12 VDC / 250 mA
*TMT 30515		5 VDC / 3000 mA	15 VDC / 500 mA 15 VDC / 500 mA
TMT 30503		3.3 VDC / 6000 mA	5 VDC / 1500 mA 12 VDC / 250 mA
TMT 30505		5 VDC / 5000 mA	3.3 VDC / 1000 mA 12 VDC / 250 mA
*TMT 50105		5 VDC / 9000 mA	
*TMT 50112		12 VDC / 4200 mA	
*TMT 50115	50 W	15 VDC / 3400 mA	
*TMT 50124		24 VDC / 2300 mA	
*TMT 50148		48 VDC / 1150 mA	

* For chassis mount version add suffix C

DIN-rail mount adapter

TMT-MK1	for 15 W chassis mount models
TMT-MK2	for 30 W chassis mount models
TMT-MK5	for 50 W chassis mount models

Dimensions

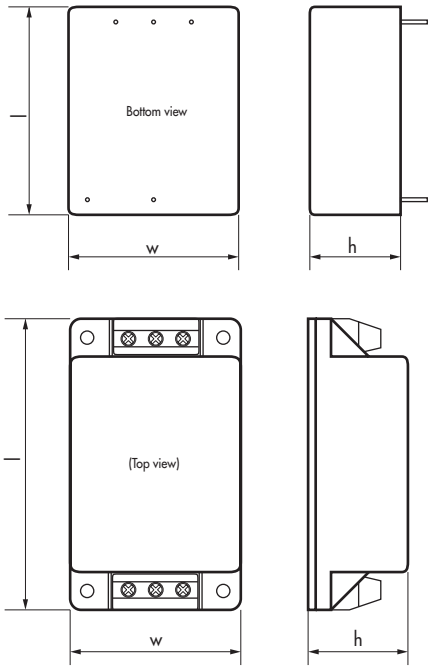

() = Inch

	PCB mount			Chassis mount		
Type	Length l	Width w	Height h	Length l	Width w	Height h
TMT 10xxx	51 (2.00)	33 (1.30)	21.6 (0.79)			
TMT 15xxx	55 (2.16)	45 (1.77)	24 (0.95)	77 (3.03)	45 (1.77)	26.4 (1.04)
TMT 301xx	76 (2.99)	51 (2.00)	28 (1.10)	96 (3.78)	51 (2.01)	29.5 (1.16)
TMT 3021x	76 (2.99)	51 (2.00)	28 (1.10)	96 (3.78)	51 (2.01)	29.5 (1.16)
TMT 30252	86 (3.39)	58 (2.28)	28 (1.10)	106 (4.17)	58 (2.28)	29.5 (1.16)
TMT 305xx	86 (3.39)	58 (2.28)	28 (1.10)	106 (4.17)	58 (2.28)	29.5 (1.16)
TMT 50xxx	89 (3.50)	64 (2.52)	28 (1.10)	110 (4.33)	64 (2.52)	31.5 (1.24)

TIW Series ► 4 to 12 W

CB Scheme
UL 60950-1

- Easy installation into standard flush boxes
- Dust and waterproof to IP 67
- Meets ERP directive (green mode), <0.3 W no load power consumption, high efficiency across full load range
- Regulated output voltage
- Safety approval to EN 60950-1 and EN 60335-1
- Protection class II
- Short circuit and overload protection

Specifications

Input voltage range	93–264 VAC, 47–63 Hz
Line regulation	1.0 % max.
Load regulation	2.0 %
Ripple & noise (20 MHz BW)	<300 mVp-p for 3.3 – 6.0 VDC models <500 mVp-p for other models
EMI suppression	EN 55022 class B
EMC immunity	EN 61000-6-2
Output current limitation	>2.5 A for 3.3 – 6.0 VDC models >3.5 A for other models
Efficiency	80 % typ.
Operating temperature	–25 °C to +50 °C
Safety standards / approvals	IEC/EN 60950-1, EN 50178, EN 60335-1, CB-report (UL approvals pending)
Degree of protection	class II as per IEC/EN 61140
Casing	IP 67, plastic (UL 94V-0 rated)
Full datasheet	www.tracopower.com/products/tiw.pdf

Models

Order code	Output power	Output voltage	Output current max.
TIW 06-103	4 W	3.3 VDC	1200 mA
TIW 06-105	5 W	5.0 VDC	1000 mA
TIW 06-106	6 W	6.0 VDC	1000 mA
TIW 12-112	12 W	12 VDC	1000 mA
TIW 12-115	12 W	15 VDC	800 mA
TIW 12-124	12 W	24 VDC	500 mA

Dimensions

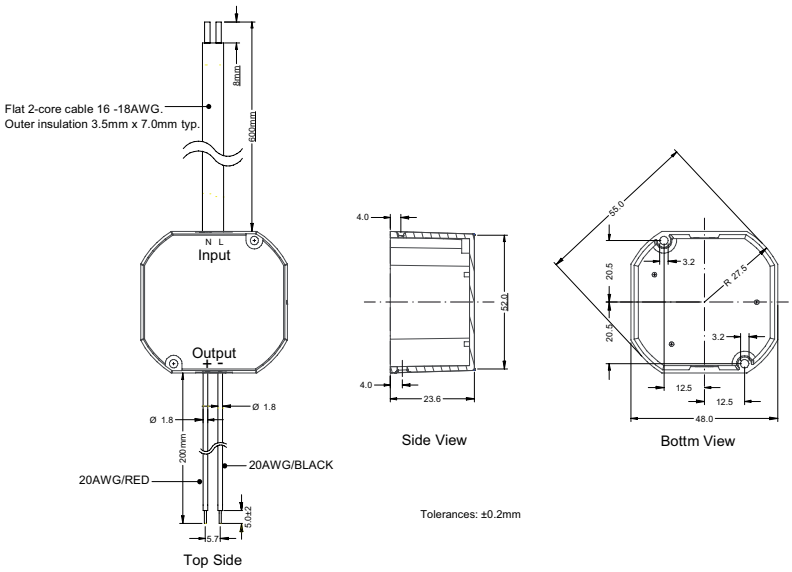

(Mounted in standard flush box)

TXM Series ► 15 to 300 W

CE CB Scheme cULus UL 60950-1

- Very compact enclosed power supplies
- Cost optimized design
- Low no load power consumption <0.5 W up to 75 W units
- Screw terminal block
- No internal fan up to 150 W models
- Universal input 88–264 VAC
- Adjustable output voltage
- Short circuit and overvoltage protection

NEW Product

Specifications

Input voltage range	88–264 VAC, 47–63 Hz
Line regulation	0.5 %
Load regulation	2.0 %
Output voltage adjustment:	±10 % of Vout nom. with potentiometer
Ripple & noise	<1 % of Vout nom.
EMI suppression	EN 55011, class B, EN 55022, class B and FCC, part 15, level B, EN 61000-3-2
EMC immunity	EN 61000-6-1
Output current limitation	>105 % of Iout max.
Overvoltage protection	>110 % of Vout nom.
Efficiency	85 % typ.
Operating temperature	−20 °C to +70 °C above 45 °C derating 2.5 %/K
Safety standards / approvals	cUL/UL 60950-1, IEC/EN 60950-1
Connection	screw terminal block
Casing	Metal enclosure, 200 and 300 Watt models with internal fan
Full datasheet	www.tracopower.com/products/txm.pdf

Dimensions

Type	Length l	Width w	Heigth h
TXM 015	79 (1.06)	51 (2.01)	29 (1.14)
TXM 025	79 (1.06)	51 (2.01)	29 (1.14)
TXM 035	102 (4.02)	64 (2.52)	33 (1.30)
TXM 050	99 (3.90)	82 (3.23)	35 (1.38)
TXM 075	129 (5.08)	99 (3.90)	38 (1.50)
TXM 100	179 (7.05)	99 (3.90)	50 (1.97)
TXM 150	179 (7.05)	99 (3.90)	50 (1.97)
TXM 200	199 (7.83)	99 (3.90)	50 (1.97)
TXM 320	226 (8.90)	115 (4.53)	50 (1.97)

() = Inch

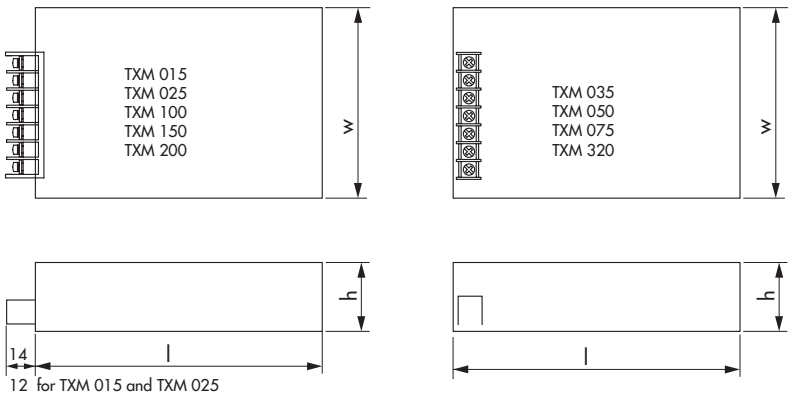

12 for TXM 015 and TXM 025

Models

Order code	Output power max.	Output voltage	Output current max.
TXM 015-103	13 W	3.3 VDC	4.0 A
TXM 015-105		5.0 VDC	3.0 A
TXM 015-112	15 W	12 VDC	1.3 A
TXM 015-115		15 VDC	1.0 A
TXM 015-124		24 VDC	0.7 A
TXM 025-103	20 W	3.3 VDC	6.0 A
TXM 025-105		5.0 VDC	5.0 A
TXM 025-112	25 W	12 VDC	2.1 A
TXM 025-115		15 VDC	1.7 A
TXM 025-124		24 VDC	1.1 A
TXM 035-105	30 W	5.0 VDC	6.0 A
TXM 035-112		12 VDC	3.0 A
TXM 035-115	35 W	15 VDC	2.3 A
TXM 035-124		24 VDC	1.5 A
TXM 035-148		48 VDC	0.75 A
TXM 050-105	40 W	5.0 VDC	8.0 A
TXM 050-112		12 VDC	4.2 A
TXM 050-115	50 W	15 VDC	3.3 A
TXM 050-124		24 VDC	2.2 A
TXM 050-148		48 VDC	1.1 A
TXM 075-105	60 W	5.0 VDC	12.0 A
TXM 075-112		12 VDC	6.0 A
TXM 075-115	75 W	15 VDC	5.0 A
TXM 075-124		24 VDC	3.2 A
TXM 075-148		48 VDC	1.6 A
TXM 100-105		5.0 VDC	20.0 A
TXM 100-112		12 VDC	8.5 A
TXM 100-115	100 W	15 VDC	6.7 A
TXM 100-124		24 VDC	4.2 A
TXM 100-148		48 VDC	2.15 A
TXM 150-112		12 VDC	12.5 A
TXM 150-124	150 W	24 VDC	6.3 A
TXM 150-148		48 VDC	3.2 A
TXM 200-112		12 VDC	16.7 A
TXM 200-124	200 W	24 VDC	8.4 A
TXM 200-148		48 VDC	4.2 A
TXM 300-112		12 VDC	25.0 A
TXM 300-124	300 W	24 VDC	13.0 A
TXM 300-136		36 VDC	8.8 A
TXM 300-148		48 VDC	6.7 A

TXL Series ► 15 to 1000 W

CE CB Scheme c UL us UL 60950-1

- Metal casing with screw terminal block
- Single-, dual- and triple output models
- Multi output models with isolated outputs
- Universal input 85–264 VAC
- Adjustable output voltage
- Short circuit and overvoltage protection

Specifications

Input voltage range	85–264 VAC, 50/60 Hz 120–370 VDC
Line regulation	1.0 %
Load regulation	2.0 %
Output voltage adjustment:	±10 % of Vout nom. with potentiometer
Ripple & noise	<1 % of Vout nom.
EMI suppression	EN 55011, class B, EN 55022, class B and FCC, part 15, level B, EN 61000-3-2
EMC immunity	EN 61000-6-1
Output current limitation	at 105–150 % of Iout max. (foldback, automatic recovery)
Overvoltage protection	at 115–140 % of Vout nom.
Efficiency	80 % typ.
Operating temperature	–10 °C to +70 °C above 45 °C derating 2 %/K
Safety standards / approvals	cUL/UL 60950-1, EN 60950-1, CB-report
Connection	screw terminal block
Casing	aluminium / steel, 230 –1000 W models with internal fan
Full datasheet	www.tracopower.com/products/txl.pdf

Dimensions

Case Type	Length l	Width w	Height h
B	62 (2.48)	51 (2.01)	28 (1.10)
C	79 (3.11)	51 (2.01)	29 (1.14)
D	99 (3.90)	82 (3.23)	35 (1.38)
E	160 (6.30)	95 (3.74)	38 (1.50)
J	198 (7.80)	95 (3.74)	38 (1.50)
L	198 (7.80)	99 (3.90)	50 (1.97)
N	198 (7.80)	99 (3.90)	45 (1.77)
O	212 (8.35)	115 (4.53)	50 (1.97)
P	275 (10.83)	125 (4.92)	63 (2.48)
Q	295 (11.61)	127 (5.00)	40 (1.57)

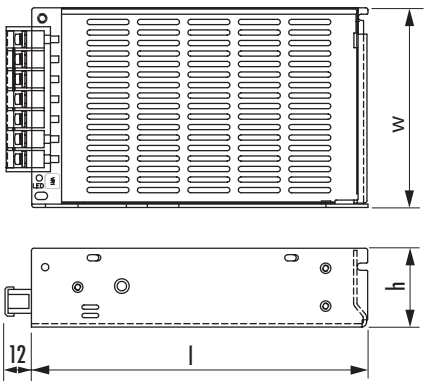

() = Inch

Models

Order code	Output power max.	Output voltage nom.	Output current max.	Case
TXL 015-3.3S	10 W	3.3 VDC	3.0 A	B
TXL 015-05 S		5 VDC	3.0 A	B
TXL 015-12 S		12 VDC	1.3 A	B
TXL 015-15 S	15 W	15 VDC	1.0 A	B
TXL 015-24 S		24 VDC	0.63 A	B
TXL 015-48 S		48 VDC	0.32 A	B
TXL 025-3.3S	20 W	3.3 VDC	6.0 A	C
TXL 025-05 S		5 VDC	5.0 A	C
TXL 025-12 S		12 VDC	2.1 A	C
TXL 025-15 S	25 W	15 VDC	1.7 A	C
TXL 025-24 S		24 VDC	1.1 A	C
TXL 025-48 S		48 VDC	0.57 A	C
TXL 035-3.3S	30 W	3.3 VDC	9.0 A	D
TXL 035-05S		5 VDC	7.0 A	D
TXL 035-12S		12 VDC	3.0 A	D
TXL 035-15S	35 W	15 VDC	2.4 A	D
TXL 035-24S		24 VDC	1.5 A	D
TXL 035-48 S		48 VDC	0.8 A	D
TXL 050-05 S	50 W	5 VDC	10.0 A	D
TXL 060-3.3S	50 W	3.3 VDC	15.0 A	E
TXL 060-05 S		5 VDC	12.0 A	E
TXL 060-12 S	60 W	12 VDC	5.0 A	D
TXL 060-15 S		15 VDC	4.0 A	D
TXL 060-24 S		24 VDC	2.5 A	D
TXL 070-12 S		12 VDC	6.0 A	E
TXL 070-15 S	70 W	15 VDC	4.8 A	E
TXL 070-24 S		24 VDC	3.0 A	E
TXL 070-48 S		48 VDC	1.5 A	E
TXL 100-05 S		5 VDC	20.0 A	J
TXL 100-12 S		12 VDC	8.5 A	J
TXL 100-15 S	100 W	15 VDC	6.8 A	J
TXL 100-24 S		24 VDC	4.5 A	J
TXL 100-48 S		48 VDC	2.1 A	J
TXL 150-05 S		5 VDC	30.0 A	L
TXL 150-12 S	150 W	12 VDC	12.5 A	L
TXL 150-24 S		24 VDC	6.3 A	L
TXL 150-48 S		48 VDC	3.2 A	L
TXL 230-12 S		12 VDC	19.2 A	N
TXL 230-24 S	230 W	24 VDC	9.6 A	N
TXL 230-48 S		48 VDC	4.8 A	N
TXL 350-24 S	350 W	24 VDC	14.7 A	O
TXL 350-48 S		48 VDC	7.5 A	O
TXL 750-24 S	750 W	24 VDC	31.3 A	P
TXL 750-48 S		48 VDC	15.8 A	P
TXL 1000-24 S	1000 W	24 VDC	40 A	Q
TXL 1000-48 S		48 VDC	21 A	Q

Multi Output Models

Order code	Output power	Output 1* max.	Output 2*	Output 3*	Case
TXL 035-0512D		+5 VDC / 4.0 A	+12 VDC / 1.5 A		D
TXL 035-0524D	35 W	+5 VDC / 4.0 A	+24 VDC / 1.3 A		D
TXL 035-1212D		+12 VDC / 1.5 A	–12 VDC / 1.5 A		D
TXL 035-1515D		+15 VDC / 1.3 A	–15 VDC / 1.3 A		D
TXL 060-0512DI		5 VDC / 8.0 A	12 VDC / 4.0 A		E
TXL 060-0524DI		5 VDC / 8.0 A	24 VDC / 2.2 A		E
TXL 060-0521TI	60 W	5 VDC / 8.0 A	12 VDC / 3.5 A	5 VDC / 1.0 A	E
TXL 060-0522TI		5 VDC / 7.0 A	12 VDC / 3.5 A	12 VDC / 1.0 A	E
TXL 060-0533TI		5 VDC / 7.0 A	15 VDC / 3.0 A	15 VDC / 1.0 A	E
TXL 060-0534TI		5 VDC / 6.0 A	12 VDC / 1.5 A	24 VDC / 1.2 A	E
TXL 100-0512DI		5 VDC / 12 A	12 VDC / 6.0 A		J
TXL 100-0524DI		5 VDC / 10 A	24 VDC / 4.0 A		J
TXL 100-0521TI	100 W	5 VDC / 12 A	12 VDC / 5.0 A	5 VDC / 1.5 A	J
TXL 100-0522TI		5 VDC / 12 A	12 VDC / 5.0 A	12 VDC / 1.5 A	J
TXL 100-0533TI		5 VDC / 12 A	15 VDC / 3.0 A	15 VDC / 1.5 A	J
TXL 100-0534TI		5 VDC / 12 A	12 VDC / 3.0 A	24 VDC / 2.0 A	J

60 & 100 Watt models with fully isolated outputs
*Total power not to exceed specified output power

TXH Series ► 120 to 480 W

CE CB Scheme c UL us UL 60950-1

- Compact U-bracket and enclosed power supplies
- Screw terminal block
- Very high efficiency up to 93%
- No internal fan for 120 W & 240 W models
- Universal input 90–264 VAC
- EMI/EMC compliance with EN 61000-6-3 / 61000-6-1
- Short circuit and overvoltage protection

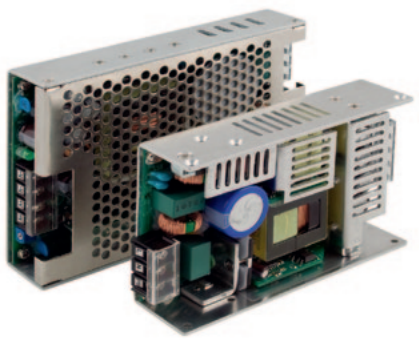

Specifications

Input voltage range	90–264 VAC, 50/60 Hz 120–370 VDC
Line regulation	1.0 %
Load regulation	1.0 %
Output voltage adjustment:	±10 % of Vout nom. with potentiometer TXH 360 and TXH 480 models only
Ripple & noise	<1 % of Vout nom.
EMI suppression	EN 55011, class B, EN 55022, class B and FCC, part 15, level B, EN 61000-3-2
EMC immunity	EN 61000-6-1
Output current limitation	>110 % of Iout max.
Overvoltage protection	>110 % of Vout nom.
Efficiency	90 % typ.
Operating temperature	−10 °C to +70 °C above 50 °C derating 2.5 %/K
Safety standards / approvals	cUL/UL 60950-1, EN 60950-1, CB-report
Connection	screw terminal block TXH 480: connector for control functions (remote On/Off, sense line, standby / auxillary output)
Casing	120 & 240 W models: U-bracket (optional cover) 360 & 480 W models: Metal enclosure
Full datasheet	www.tracopower.com/products/txh.pdf

Models

Order code	Output power max.	Output voltage	Output current max.
TXH 120-112		12 VDC	10 A
TXH 120-124	120 W	24 VDC	5 A
TXH 120-148		48 VDC	2.5 A
TXH 240-112		12 VDC	20 A
TXH 240-124	240 W	24 VDC	10 A
TXH 240-148		48 VDC	5 A
TXH 360-112		12 VDC	30 A
TXH 360-124	360 W	24 VDC	15 A
TXH 360-148		48 VDC	7.5 A
TXH 480-112*		12 VDC	40 A
TXH 480-124*	480 W	24 VDC	20 A
TXH 480-148*		48 VDC	10 A

* Standby / auxillary output 5 V / 600 mA

Cover

TXH 120-COV	Cover for TXH 120 models
TXH 240-COV	Cover for TXH 240 models

Dimensions

120 W & 240 W models:

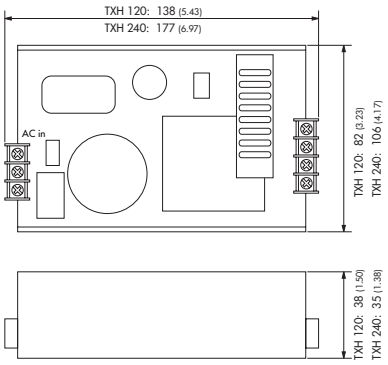

360 & 480 W models:

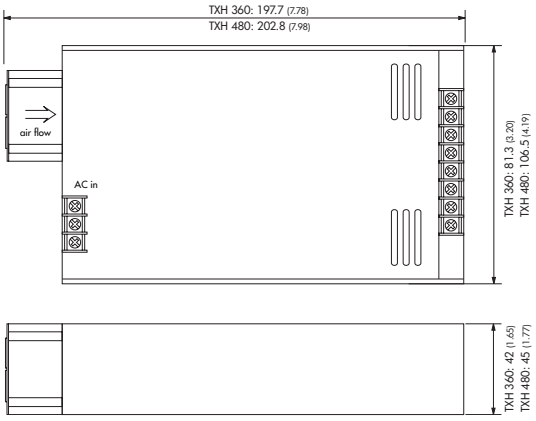

() = Inches

TEX Series ► 120 W

CE CB Scheme UL 508 IP67 Ex II 3 G

- Sealed, rugged die-cast aluminium casing
- Dust- and water resistant to IP67 & NEMA 4X
- Wide operating temperature range –40 °C to +85 °C
- Easy connection via waterproof plugs
- Universal input voltage 85–264 VAC
- Adjustable output voltage
- Short circuit and overload protection
- UL 508 listed
- Class I, zone 2 approval incl. ATEX certification for hazardous locations (Class I, Div. 2)

Specifications

Input voltage range	85–264 VAC, 47–63 Hz 85–375 VDC
Outpu regulation	2.5 % max.
Output voltage adjustment	12 V model: 12 - 15 VDC, 24 V model: 24 - 28 VDC, with internal potentiometer
Ripple & noise	<50 mVpk-pk (20 MHz BW)
EMI suppression	EN 55022 class B, harmonic current EN 61000-3-2, class A
EMC immunity	EN61000-6-2, SEMI F47
Output current limitation	>125% Inom.
Efficiency	90 % typ.
Operating temperature	–40 °C to +85 °C (convection cooling) above 60 °C derating 2.0 %/K
Safety standards / approvals	UL 508, UL 1604, IEC/EN 60950-1 (CB-Report), EN 50178, EN 60204, EN 61558-2-8, IEC/EN 60079-15 (class I, div.2), UL 60079-15, ANSI/ISA 12.12.01 (class I, div. 2), EN 50021, ATEX 94/9/EC
Degree of protection	safety class I, (IEC 536)
Case protection	IP 67 (IEC 60529), NEMA 4X rated, UL 50
Shock & vibration	meets IEC 60068-2-6, IEC 60068-2-27
Humidity	up to 100 % rel. H with condensation
Full datasheet	www.tracopower.com/products/tex120.pdf

Models

Order code	Output power	Output voltage	Output current max.
TEX 120-112	96 W	12 VDC	8 A
TEX 120-124	120 W	24 VDC	5 A

Accessories

TEX-P11	AC input connector
TEX-P21	DC output connector
TEX-C11	Input cable assembly 2m (for UL508 compliance)
TEX-C21	Output cable assembly 2m

Dimensions

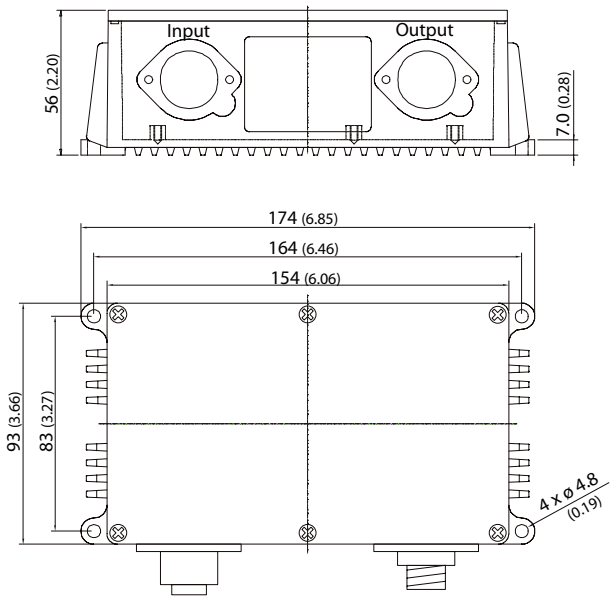

() = Inches

Mating Connectors (not included in shipment)

AC Input:	Binder 3-pin female circular plug 693 series: 99-4222-14-04
DC Output:	Binder 7-pin male circular plug 693 series: 99-4225-160-07

units are supplied with sealing connector caps

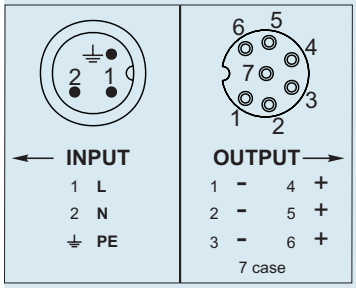

TMP-C Series ► 15 to 60 W

CB Scheme · UL 60950-1 · UL 508

- Fully encapsulated low profile plastic case
- For DIN-rail mount or chassis mount
- Screw terminal block
- Single-, dual- and triple output models
- Universal input 85–264 VAC, 47–440 Hz
- UL 508 listed
- Safety class II
- Protection against short circuit, overload and over-temperature

Specifications

Input voltage range	85–264 VAC, 47–440 Hz (47–63 Hz for 60 W models) 120–370 VDC
Line regulation	1.0 % max.
Load regulation	1.0 % typ. Output 1 3.0 % typ.Output 2 & 3
Ripple & noise (20 MHz BW)	<2% of Vout nom. for 5 VDC outputs <1.3 % of Vout nom. for other outputs
EMI suppression	EN 55011 class B, EN 55022 class B and FCC, level B
EMC immunity	EN61000-6-1
Output current limitation	>105% Inom. foldback, automatic recovery
Efficiency	80 % typ.
Operating temperature	–25 °C to +65 °C above 50 °C derating 3.3 %/K
Safety standards / approvals	cUL/UL 60950-1, IEC/EN 60950-1, UL 508 (single output and symetric dual output models only), CB-report
Degree of protection	safety class II
Casing	plastic (UL 94V-0 rated)
Full datasheet	www.tracopower.com/products/tmp.pdf

Models

Order code*	Output power	Output 1	Output 2/3
TMP 15105C		5.0 VDC / 3000 mA	
TMP 15112C		12 VDC / 1250 mA	
TMP 15115C		15 VDC / 1000 mA	
TMP 15124C		24 VDC / 625 mA	
TMP 15148C	15 W	48 VDC / 310 mA	
TMP 15212C		+12 VDC / 650 mA	-12 VDC / 650 mA
TMP 15215C		+15 VDC / 500 mA	-15 VDC / 500 mA
TMP 15252C		+5.0 VDC / 1500 mA	+12 VDC / 625 mA
TMP 15512C		+5.0 VDC / 2000 mA	+12 VDC / 200 mA -12 VDC / 200 mA
TMP 15515C		+5.0 VDC / 2000 mA	+15 VDC / 150 mA -15 VDC / 150 mA
TMP 30105C		5.0 VDC / 6000 mA	
TMP 30112C		12 VDC / 2500 mA	
TMP 30115C		15 VDC / 2000 mA	
TMP 30124C		24 VDC / 1250 mA	
TMP 30148C		48 VDC / 625 mA	
TMP 30212C		+12 VDC / 1300 mA	-12 VDC / 1300 mA
TMP 30215C		+15 VDC / 1000 mA	-15 VDC / 1000 mA
TMP 30252C		+5.0 VDC / 3000 mA	+12 VDC / 1250 mA
TMP 30512C	30 W	+5.0 VDC / 3000 mA	+12 VDC / 600 mA -12 VDC / 600 mA
TMP 30515C		+5.0 VDC / 3000 mA	+15 VDC / 500 mA -15 VDC / 500 mA
TMP 30522C		+5.0 VDC / 1500 mA	+12 VDC / 1000 mA -12 VDC / 250 mA
TMP 30316C		+3.3 VDC / 4000 mA	+5.0 VDC / 1500 mA +12 VDC / 250 mA
TMP 30317C		+5.0 VDC / 4500 mA	+3.3 VDC / 1000 mA +12 VDC / 250 mA
TMP 60105C		5.1 VDC / 10'000 mA	
TMP 60112C		12 VDC / 5000 mA	
TMP 60115C	60 W	15 VDC / 4000 mA	
TMP 60124C		24 VDC / 2500 mA	
TMP 60136C		36 VDC / 1670 mA	
TMP 60148C		48 VDC / 1250 mA	

* DIN-rail mount adapter to be ordered separately

DIN-rail mount adapter

TMP-MK1	for 15 W version
TMP-MK2	for 30 W and 60 W versions

Dimensions

Type	Length l	Width w	Height h
TMP 15xxxC	96 (3.78)	54.0 (2.13)	23.3 (0.88)
TMP 30xxxC	112 (4.41)	63.8 (2.51)	25.6 (1.01)
TMP 60xxxC	112 (4.41)	67.8 (2.67)	38.0 (1.50)

() = Inches

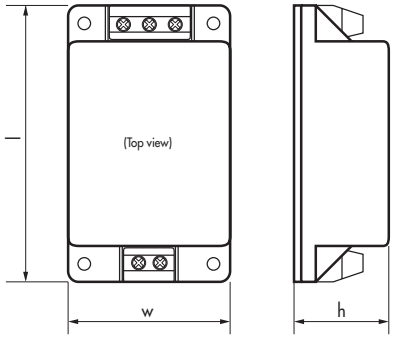

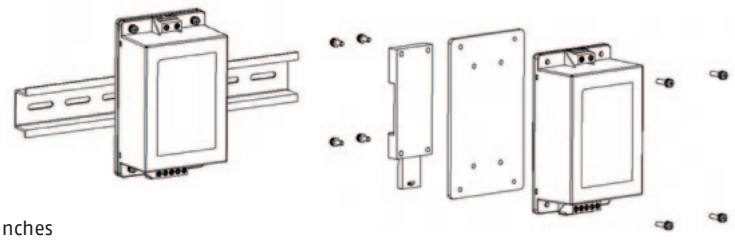

() = Inches

TBL Series ► 15 to 150 W

CB Scheme UL 60950-1 UL 508

- Low profile plastic case
- For building- and industrial automation applications
- Model with battery controller for UPS system
- Fits into flat control panels
- Meets NEC class II (limited power source)
- Safety class II
- Universal input voltage 85–264 VAC
- Adjustable output voltage
- Short circuit and overload protection
- UL 508 listed

Specifications

Input voltage range	85–264 VAC, 47-63 Hz TBL 150 models: 85–132 / 187–264 VAC (autorange)
Output regulation	1.0 % max.
Output voltage adjustment range	5 V models: 5.0 - 5.2 VDC 12 V models: 12.0 - 16.0 VDC 24 V models: 24.0 - 28.0 VDC
Ripple & noise	<100 mVpk-pk (20 MHz BW)
EMI emission	EN 55011/22, class B, EN61000-6-3
EMC immunity	EN 61000-6-2
Output current limitation	>105% of Iout max.
Over voltage protection	at 140 % of Vout nom.
Efficiency	80 % typ.
Operating temperature	−25 °C to +70 °C above 60 °C derating 2.5%/K
Safety standards / approvals	UL 1310, IEC/EN 60950-1, CB-Report, cUL/UL 508 listed, EN 50178, EN 60204, EN 61558-2-8
Connection	screw terminals
Casing	plastic (UL 94V-0 rated)
Mounting	snap-on mounting on 35 mm DIN-rail
Full datasheet	www.tracopower.com/products/tbl.pdf

Models

Order code	Output power max.	Output voltage	Output current max.
TBL 015-105*		5.0 VDC	2.4 A
TBL 015-112*	15 W	12 VDC	1.25 A
TBL 015-124*		24 VDC	0.63 A
TBL 030-112*	30 W	12 VDC	2.5 A
TBL 030-124*		24 VDC	1.25 A
TBL 060-112*	60 W	12 VDC	4.5 A
TBL 060-124*		24 VDC	2.5 A
TBL 090-112	90 W	12 VDC	6.0 A
TBL 090-124*		24 VDC	3.75 A
TBL 150-112	120 W	12 VDC	10 A
TBL 150-124	150 W	24 VDC	6.25 A

* Models meet NEC class II (limited power source) acc. UL 1310

Model with Battery Controller (For UPS-System)

Order code	Battery voltage	Max. Battery load current	Output voltage adj.	Power max.
TBL 060-124BC	24 VDC	2 A	26-29.5 VDC	60 W

For detailes see datasheet: **www.tracopower.com/products/tbl-bc.pdf**

Dimensions

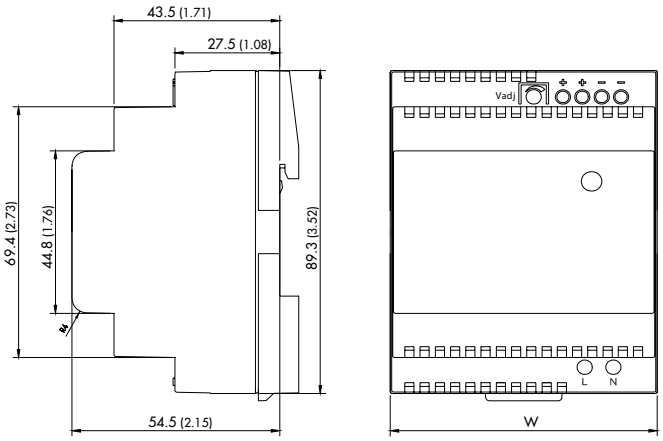

() = Inches

Type	Width (w)
TBL 015	26.3 (1.03)
TBL 030	52.5 (2.07)
TBL 060	70 (2.78)
TBL 090	105 (4.13)
TBL 150	175 (6.89)
TBL 060-124BC	175 (6.89)

TCL / TCL-DC Series ► 24 to 240 W

CE CB Scheme c UL us UL 60950-1 UL 508

- Slim plastic case
- For industrial-, office- and residential environments
- Available with detachable screw terminals or spring clamps
- Standard models with 5, 12, 24 and 48 VDC output
- Models with DC input: 9.5-18 VDC and 18-75 VDC
- Universal input 85-264 VAC
- Worldwide safety approval package
- Adjustable output voltage
- Power Good signal
- Parallel and redundant operation

Specifications

Input voltage range	85-264 VAC, 47-63 Hz, 85-375 VDC TCL 240 models: 85-132 / 187-264 VAC (autorange) DC Input models: 18-75 VDC TCL 012-124 DC: 9.5-18 VDC
Output regulation	1.25 % max.
Ripple & noise	<50 mVpk-pk (20 MHz BW)
EMI emission	EN 55011, class B, EN 55022, class B, EN61000-6-3
EMC immunity	EN 61000-6-2 (industrial environment), SEMI F47
Output current limitation	at 130 % of Iout max.
Over voltage protection	at 140 % of Vout nom.
Efficiency	90 % typ.
DC-OK Signal	open collector / max. 30 mA
Operating temperature	-10 °C to +70 °C , -25 °C to +70 °C for DC input models above 50 °C derating 1.7 %/K
Safety standards / approvals	cUL/UL 60950-1, UL 508C listed, IEC/EN 60950-1, CB-Report EN 50178, EN 60204, EN 61558-2-8
Connection	detachable screw terminals or spring clamp terminals
Casing	plastic (UL 94V-0 rated)
Mounting	snap-on mounting on 35 mm DIN-rail or chassis mounting with mounting bracket (included)
Options	output current characteristics set for battery charging applications
Full datasheet	AC/DC: www.tracopower.com/products/tcl.pdf DC/DC: www.tracopower.com/products/tcl-dc.pdf

Models

Order code	Output power max.	Output voltage (adjustable output)	Output current max.
TCL 024-105		5.1 VDC	4.0 A
TCL 024-112	24 Watt	12 VDC	2.0 A
TCL 024-124 (C)		24 VDC	1.0 A
TCL 060-112 (C)		12 VDC	4.0 A
TCL 060-124 (C)	60 Watt	24 VDC	2.5 A
TCL 060-148 (C)		48 VDC	1.25 A
TCL 120-112 (C)	120 Watt	12 VDC	8.0 A
TCL 120-124 (C)		24 VDC	5.0 A
TCL 240-124	240 Watt	24 VDC	10.0 A

without suffix: detachable screw terminal block
with suffix C: spring clamps

Redundancy Module

Order code	2 Inputs	Output voltage	Output current max.
TCL-REM240	5 - 60 VDC 144 W max./input	Vin - 0.9 VDC	8.0 A

Models with DC Input

Order code	Input voltage range	Output voltage (adjustable output)	Output current max.
TCL 012-124DC	9.5-18 VDC	24 VDC	1.0 A
TCL 024-105DC		5 VDC	5.0 A
TCL 024-112DC	18-75 VDC	12 VDC	2.0 A
TCL 024-124DC		24 VDC	1.0 A
TCL 060-112DC	18-75 VDC	12 VDC	5.0 A
TCL 060-124DC		24 VDC	2.5 A

Dimensions

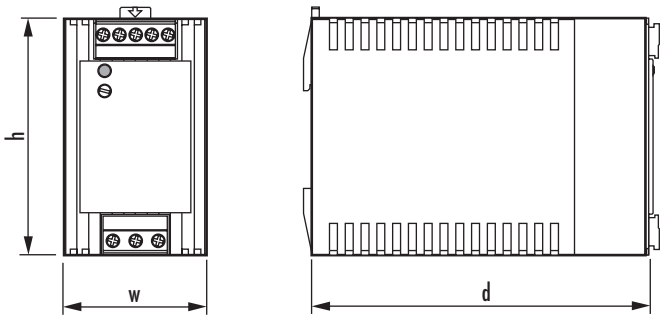

Type	Width w	Heigth h	Depth d
TCL 012	27 (1.06)	75 (2.95)	100 (3.94)
TCL 024 & REM	27 (1.06)	75 (2.95)	100 (3.94)
TCL 060	45 (1.77)	75 (2.95)	100 (3.94)
TCL 120	85 (3.35)	75 (2.95)	100 (3.94)
TCL 240	85 (3.35)	110 (4.33)	125 (4.92)

() = Inches

TPC Series ► 30 to 120 W

- Compact plastic case
- For industrial-, office- and residential environments
- Meets ERP directive (green mode), <0.3 W no load power consumption, high efficiency across full load range
- Universal input 85–264 VAC
- Worldwide safety approval package
- Adjustable output voltage +20% of nominal
- Power Good signal
- Remote On/Off
- Parallel and redundant operation

NEW Product

Specifications

Input voltage range	85–264 VAC, 47-63 Hz universal input 90–375 VDC
Line regulation	0.5% max.
Load regulation	0.5% max.
Ripple & noise	<80 mVpk-pk (20 MHz BW)
EMI emission	EN61000-6-3 (residential environment)
EMC immunity	EN 61000-6-2 (industrial environment), SEMI F47
Output current limitation	100 - 200 % of Iout max. (constant current)
Overvoltage protection	at 160% of Vout nom.
Efficiency	87% average at power consumption 25-100%. - standby power loss: TPC 030: <0.3W, other models <0.5W
Operating temperature	-25°C to +70°C above 50°C derating 2.5% / K
Safety standard	IEC/EN 60950-1, EN 50178, EN 60204, UL 508, UL 60950-1
Connection	screw terminals
Casing	plastic
Mounting	snap-on mounting on 35 mm DIN-rail or chassis mounting with mounting bracket (included)
Remote On/Off	shutdown input for standby operation - power loss: TPC 030: <0.3 W, other models <0.5 W
Full datasheet	www.tracopower.com/products/tpc.pdf

Models

Order code	Output power max.	Output voltag nominal	Output voltag adjustable range	Output current max.
TPC 030-105	20 W	5 VDC	5.0-6.0 VDC	4.0 A
TPC 030-112	30 W	12 VDC	12-15 VDC	2.2 A
TPC 030-124	30 W	24 VDC	24-28.8 VDC	1.25 A
TPC 030-148	30 W	48 VDC	48-56 VDC	0.6 A
TPC 055-112	42 W	12 VDC	12-15 VDC	3.5 A
TPC 055-124	55 W	24 VDC	24-28.8 VDC	2.3 A
TPC 055-148	55 W	48 VDC	48-56 VDC	1.15 A
TPC 080-112	72 W	12 VDC	12-15 VDC	6.0 A
TPC 080-124	80 W	24 VDC	24-28.8 VDC	3.3 A
TPC 080-148	80 W	48 VDC	48-56 VDC	1.7 A
TPC 120-112	96 W	12 VDC	12-15 VDC	8.0 A
TPC 120-124	120 W	24 VDC	24-28.8 VDC	5.0 A
TPC 120-148	120 W	48 VDC	48-56 VDC	2.5 A

Redundancy Module

Order code	2 Inputs	Output voltage	Output current max.
TPC-REM240-24	24 VDC 5 A max / input	24 - 27 VDC adjustable	10.0 A

- Active current sharing
- DC-OK signal output

Dimensions

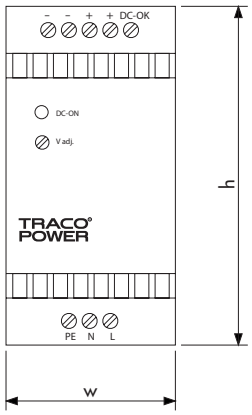

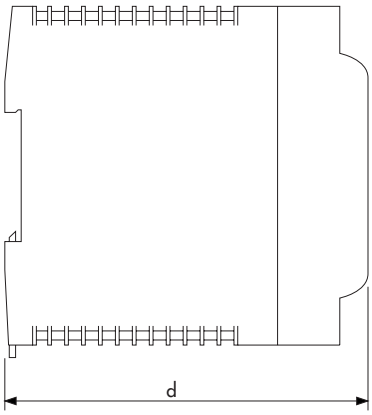

Type	Width w	Heigth h	Depth d
TPC 030	24 (0.95)	90 (3.54)	96.5 (3.80)
TPC 055	44 (1.73)	90 (3.54)	96.5 (3.80)
TPC-REM240-24	44 (1.73)	90 (3.54)	96.5 (3.80)
TPC 080	62 (2.44)	90 (3.54)	96.5 (3.80)
TPC 120	70 (2.76)	90 (3.54)	110 (4.33)

() = Inches

TSPC Series ► 80 to 480 W

CB Scheme UL 60950-1 UL 508 II3G

- Cost optimized design in rugged, compact metal casing for harsh industrial environments
- Operating temperature range –25 °C to +70 °C
- Boost power up to 120%
- Industrial safety approval package
- ATEX certification for hazardous locations
- Power Good signal
- Overload and over temperature protection
- Vibration and shock proof

Specifications

Input voltage range	85-132 VAC / 187-264 VAC by selection switch, 47-63 Hz
Line regulation	1.0% max.
Load regulation	1.0 % max
Ripple & Noise	<200 mVpk-pk
EMI emission	EN 61204-3, EN 61000-6-3
EMC immunity	EN 61204-3, EN 61000-6-2 (industrial environment), SEMI F47
Output current limitation	at 120 % of Iout max.
Over-temperature protection	switch off at over-temperature, automatic restart.
Over voltage protection	45 V
Efficiency	90 % typ.
Operating temperature	–25 °C to +70 °C above 60 °C derating 2.5 %/K
Safety standards / approvals	IEC/EN 60950-1, UL 60950-1, CSA 22.2 No 60950-1-07 UL 508, CSA-C22.2 No.107, EN 60204-1, EN 50178 EN 61558-2-4, IEC/EN 60079-15- II3G EX nA IIC T4
Degree of protection	safety class I (IEC 536).
Case protection	IP20 (IEC 529)
Vibration/Shock	IEC 60068-2-6 / IEC 60068-2-27
Connection	screw terminals
Casing	aluminium (chassis) / stainless steel (cover)
Mounting	– snap-on mounting on 35 mm DIN-Rail – wall mounting brackets (option)
Full datasheet	www.tracopower.com/products/tspc.pdf

Models

Order code	Output power max.	Output voltage nom.	Output current max.
TSPC 080-124	80 W	24 VDC	3.3 A
TSPC 120-124	120 W	24 VDC	5.0 A
TSPC 240-124	240 W	24 VDC	10 A
TSPC 480-124	480 W	24 VDC	20 A

Decoupling Module

Order code	Input voltage	Input current	Voltage drop across the diodes
TSPC-DCM600	5 - 28 VDC max.	25 A max.	0.75 V typ. / 1.2 V max.

The module contains two diodes for redundant operation of two power supplies of any series. There is no active current sharing and no signal output.

www.tracopower.com/products/tspc-dcm.pdf

Wall mount brackets

TSP-WMK03	for 80 - 240 W and -DCM models
TSP-WMK02	for 480 W model

Dimensions

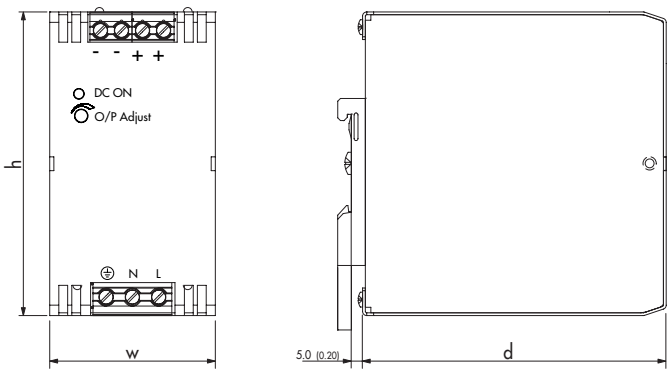

Type	Width w	Heigth h	Depth d
TSPC 080-124	40 (1.57)	110 (4.33)	110 (4.33)
TSPC 120-124	46 (1.81)	110 (4.33)	110 (4.33)
TSPC 240-124	60 (2.36)	110 (4.33)	110 (4.33)
TSPC 480-124	150 (5.90)	110 (4.33)	115 (4.53)
TSPC-DCM600	54 (2.13)	110 (4.33)	110 (4.33)

TSP Series ► 72 to 600 W

UL 60950-1 UL 508 II 3 G

- Rugged, ultra compact metal casing for harsh industrial environments
- Operating temperature range –25 °C to +70 °C
- Industrial safety approval package
- ATEX certification for hazardous locations (Opt.)
- Add-on function modules for system application
- Power Good signal, remote On/Off
- Overload and over temperature protection
- Vibration and shock proof
- Detachable screw terminal block

Specifications

Input voltage range	85–264 VAC, 47–63 Hz, autorange
Line regulation	0.5 % max.
Load regulation	0.5 % max
Ripple & Noise	<150 mVpk-pk
EMI emission	EN 61204-3, EN 61000-6-3
EMC immunity	EN 61204-3, EN 61000-6-2 (indust. environment), SEMI F47
Output current limitation	at max. output current (constant current, automatic restart)
Over-temperature protection	switch off at over-temperature, automatic restart.
Output characteristic	selectable for parallel operation or battery charging application
Over voltage protection	20 V for 12 VDC models, 35 V for 24 VDC models, 60V for 48 VDC models
Efficiency	87 % typ.
Operating temperature	–25 °C to +70 °C above 40 °C derating see datasheet
Safety standards / approvals	IEC/EN 60950-1, UL 60950-1, CSA-C22.2 No. 60950-1-03 UL 508, CSA-C22.2 No. 107, EN 60204, EN 50178, EN 61558-2-4, with option -EX: UL 60079-15 (Class I, Division 2, Groups A,B,C,D AEx n C II C T4 U), IEC/EN 60079-15 (Class I, Zone 2, EEx nC II C T4 U), II3G EEX nAC IIC T4
Degree of protection	safety class I (IEC 536).
Case protection	IP20 (IEC 529)
Vibration/Shock	IEC 60068-2-6 / IEC 60068-2-27
Connection	detachable screw terminals
Casing	aluminium (chassis) / stainless steel (cover)
Mounting	– snap-on mounting on 35 mm DIN-Rail – wall mounting brackets (option)
Full datasheet	www.tracopower.com/products/tsp.pdf

Models

[1] Order code	Output power max.	[2] Output voltage nom.	[3] Output current max.
TSP 070-112	72 W	12 VDC	6.0 A
TSP 090-124		24 VDC	3.75 A
TSP 090-124N[4]	90 W	24 VDC	3.75 A
TSP 090-148		48 VDC	2.0 A
TSP 140-112		12 VDC	12.0 A
TSP 180-124	180 W	24 VDC	7.5 A
TSP 180-148		48 VDC	4.0 A
TSP 360-124	360 W	24 VDC	15.0 A
TSP 360-148		48 VDC	7.5 A
TSP 600-124		24 VDC	25.0 A
TSP 600-136	600 W	36 VDC	16.5 A
TSP 600-148		48 VDC	12.5 A

[1] Suffix EX: For ATEX certified models (Example TSP 180-124 EX)
[2] Output voltage adjustable 12-14 VDC, 24-28 VDC, 48-56 VDC
[3] Max. current at nominal output voltage and max. 40°C ambient temperature
[4] Model meets EN 60950-1 sect. 2.5 and NEC Class2 (limited power source)

Add-on function modules

See page 122

Wall mount brackets

TSP-WMK03	for 72 - 180 W models
TSP-WMK02	for 360 - 600 W models

Dimensions

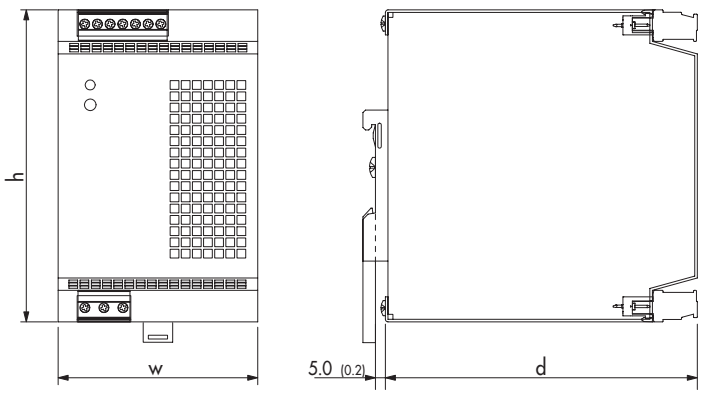

() = Inches

Type	Width w	Heigth h	Depth d
TSP 070 / 090	35 (1.38)	110 (4.33)	110 (4.33)
TSP 140 / 180	54 (2.13)	110 (4.33)	110 (4.33)
TSP 360	80 (3.15)	125 (4.92)	125 (4.92)
TSP 600	165 (6.50)	125 (4.92)	125 (4.92)

TSP-3P Series ► 240-960 W

CE CB Scheme cULus UL 60950-1 UL 508 Ex II 3 G

- Low cost-weight-size alternative to 3-phase transformers
- 3AC 320–440 V or 3AC 400–550 VAC input ranges
- Rugged, ultra compact metal casing for harsh industrial environments
- Industrial safety approval package
- ATEX certification for hazardous locations
- Operating temperature range –25 °C to +70 °C
- 200% peak current for up to 5 seconds (electronic controlled)
- Power Good signal
- Overload and over temperature protection

Specifications

Input voltage ranges:	3xAC 320–440 V or 3xAC 400–550 V
Line regulation	1.0 % max
Load regulation	3.0 % max.
Ripple & noise	<100 mVpk-pk
EMI emission	EN 61000-6-3
EMC immunity	EN 61000-6-2 (industrial environment)
Output current limitation	at 220% of nominal current (constant current, automatic restart)
Over-temperature protection	switch off at over-temperature, automatic restart
Over voltage protection	at 35 VDC
Efficiency	92% typ.
Operating temperature	–25°C to +70°C above 60°C derating 2.5 %/K
Safety standards / approvals	cUL/UL 60950-1 recognized, IEC/EN 60950-1, UL 508, (CB-Report), EN 50178, EN 60204, EN 61558-2-4, FM 3611, IEC/EN 60079-15, ANSI/ISA 12.12.01 (Class I, Div. 2), ATEX 94/9/EC
Degree of protection	safety class I (IEC 536)
Case protection	IP20 (IEC 529)
Vibration/Shock	IEC 60068-2-6 / IEC 60068-2-27
Connection	detachable screw terminals
Casing	aluminium (chassis) / stainless steel (cover)
Mounting	– snap-on mounting on 35 mm DIN-Rail – wall mounting brackets (option)
Full datasheet	www.tracopower.com/products/tsp3p.pdf

Models

240 W Models

Order code	Input voltage nom.	Output voltage nom.	Output current nom.*
TSP 240-124-3PAC400	3 AC 400 V	24 VDC	10 A
TSP 240-124-3PAC500	3 AC 500 V	24 VDC	10 A

480 W Models

Order code	Input voltage nom.	Output voltage nom.	Output current nom.*
TSP 480-124-3PAC400	3 AC 400 V	24 VDC	20 A
TSP 480-124-3PAC500	3 AC 500 V	24 VDC	20 A

960 W Models

Order code	Input voltage nom.	Output voltage nom.	Output current nom.*
TSP 960-124-3PAC400	3 AC 400 V	24 VDC	40 A
TSP 960-124-3PAC500	3 AC 500 V	24 VDC	40 A

*200% peak current for up to 5 sec.

Wall mount brackets

TSP-WMK03	for 240 W models
TSP-WMK02	for 480 - 960 W models

Dimensions

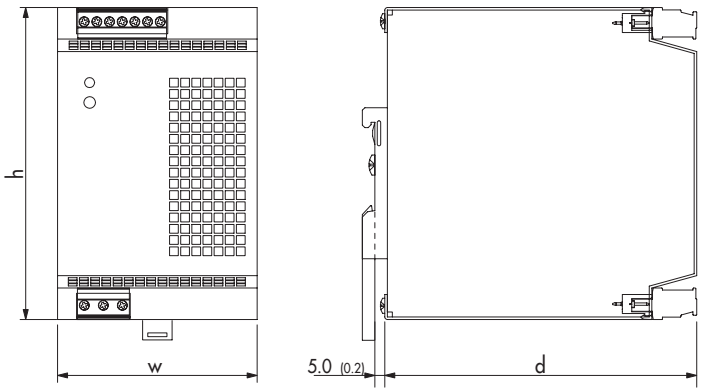

Type	Width w	Heigth h	Depth d
TSP 240	54 (2.13)	110 (4.33)	110 (4.33)
TSP 480	80 (3.15)	125 (4.92)	125 (4.92)
TSP 960	165 (6.50)	125 (4.92)	125 (4.92)

() = Inches

TSP-WR Series ► 180 to 600 W

CE CB Scheme c UL us UL 60950-1

- For worldwide operation, with ultra wide input voltage ranges from 100 to 500 VAC, for single phase and two phase operation
- Rugged, ultra compact metal casing for harsh industrial environments
- Operating temperature range –25 °C to +70 °C
- Industrial safety approval package
- Add-on function modules for system application
- Overload and over temperature protection
- Power Good signal, remote On/Off
- Vibration and shock proof
- Detachable screw terminal block

Specifications

Applicable 3-phase networks	– TN, TT: 500 VAC Star configuration (EN60950+UL508) 500 VAC Delta (UL508 only) – IT: 400 VAC Delta (IEC-62103) 230 VAC Delta (IEC-60950) 500 VAC (UL508 only)
Input voltage ranges	85–132 VAC / 187–550 VAC range selectable by switch
Line regulation	0.5 % max
Load regulation	0.5 % max.
Ripple & noise	<150 mVpk-pk
EMI emission	EN 61204-3, EN 61000-6-3
EMC immunity	EN 61204-3, EN 61000-6-2 (industrial environment), SEMI F47
Output current limitation	at max. output current (constant current, automatic restart)
Over-temperature protection	switch off at over-temperature, automatic restart
Output characteristic	selectable for parallel operation or battery charging application
Over voltage protection	at 35 VDC
Efficiency	88 % typ.
Operating temperature	–25 °to +70 °C above 40 °C derating see datasheet
Safety standards / approvals	cUL/UL 60950-1 recognized, UL 508, IEC/EN 60950-1, (CB-Report), EN 50178, EN 60204, EN 61558-2-16, FM 3611, IEC/EN 60079-15 (Class I, Div. 2)
Degree of protection	safety class I (IEC 536)
Case protection	IP20 (IEC 529)
Vibration/Shock	IEC 60068-2-6 / IEC 60068-2-27
Connection	detachable screw terminals
Casing	aluminium (chassis) / stainless steel (cover)
Mounting	– snap-on mounting on 35 mm DIN-Rail – wall mounting brackets (option)
Full datasheet	www.tracopower.com/products/tsp-wr.pdf

Models

[1] Order code	Output power max.	[2] Output voltage nom.	[2] Output current max.
TSP 180-124WR	180 Watt	24 VDC	7.5 A
TSP 360-124WR	360 Watt	24 VDC	15.0 A
TSP 600-124WR	600 Watt	24 VDC	25.0 A

[1] Output voltage adjustable 24-28 VDC
[2] Max. current at nominal output voltage and max. 40°C ambient temperature

Add-on function modules

See page 122

Wall mount brackets

TSP-WMK03	for 180 W models
TSP-WMK02	for 360 - 600 W models

Dimensions

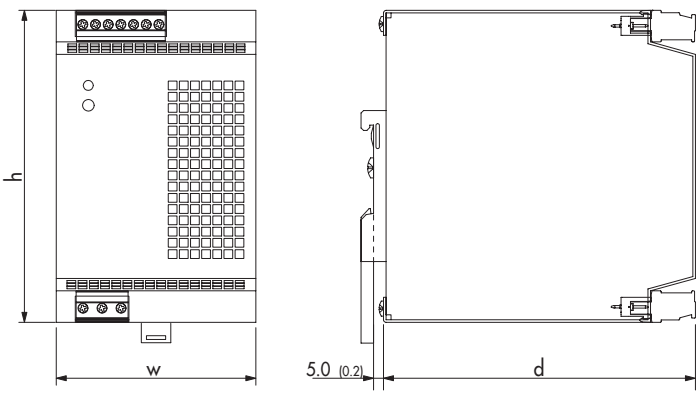

() = Inches

Type	Width w	Heigth h	Depth d
TSP 180	54 (2.13)	110 (4.33)	110 (4.33)
TSP 360	80 (3.15)	125 (4.92)	125 (4.92)
TSP 600	190 (7.48)	125 (4.92)	125 (4.92)

TSP / TSP-WR Series ► Function Modules

- TSP-REM redundancy module with active current sharing for highly reliable parallel operation
- TSP-BCM battery controller module to configurate professional DC-backup systems (DC-UPS)
- TSP-BAT battery packs with capacity 1.2 to 12 Ah
- TSP-BFM buffer module to bridge voltage dips and black-outs up to 4 sec. without batteries

Specifications

Redundancy Module

With this module and two power supplies of the TSP series a highly reliable, true redundant power system can be configured without any additional components.This module provides:

- Operation with true current sharing
- Alarm outputs and redundancy OK signal
- Hot swappable inputs can be loaded up to 15 A each (resp. 25 A with model TSP REM600)

Battery Controller Module

This module provides a professional battery controller to charge and monitor an external lead-acid battery. Together with a power supply of the TSP series and a battery pack a perfect DC-UPS system can be configured. This module provides:

- Battery protection for over voltage, deep discharge, short circuit and reverse connection
- Remote On/Off for battery and power supply
- Alarm outputs for input, output and battery condition
- Controlled end of charge voltage by temperature sensor

Battery Packs

Sealed, maintenance free Lead-Acid batteries incl. wall mounting kit. Available with 1.2, 3.4, 7.2 and 12 Ah capacity.

Buffer Module

This module will maintain the output voltage of a 24 VDC power supply during typical mains faults, short time blackouts or voltage dips of up to ten full 50 Hz cycles. During this buffer period no deterioration of the 24 VDC output voltage will occur. This module provides:

- Capacitor bank for energy storage, no battery needed!
- Maintenance free, long lifetime, high performance also at low temperature.
- Guaranteed Hold-up-time 200 ms/25 A to 4 s/1.2 A max.
- Output 24 to 28 VDC, 600 W max.
- Active ready and inhibit signals

Download full datasheet at ► www.tracopower.com/products/tsp.pdf

Redundancy Module

Order code	Input	Max. power per input	Output voltage adjust	Output power max.
TSP-REM360	2 x 24 VDC 2 x Control	360 W	24 VDC	360 W
TSP-REM600		600 W	(24 – 27 VDC)	600 W

Battery Controller Module

Order code	Input	Max. power	Output voltage nom.	Output power max.
TSP-BCM24	24 VDC and 24 V Battery	360 W	24 VDC	360 W
TSP-BCM24A		600 W	24 VDC	600 W

Battery Pack

Order code	Nominal voltage	Charge current max.	Nominal capacity (at 25°C, 77°F)
TSP-BAT24-012	24 VDC	0.36 A	1.2 Ah
TSP-BAT24-034		0.80 A	3.4 Ah
TSP-BAT24-072		1.75 A	7.2 Ah
TSP-BAT24-120		3.00 A	12.0 Ah
TSP-BAT24-072KIT	Installation rack without batteries		
TSP-BAT24-120KIT	Installation rack without batteries		

Buffer Module

Order code	Nominal voltage	Charge current max.	Nominal capacity (at 25°C, 77°F)
TSP-BFM24	24...28VDC	200ms typ. @ 25A max. 4.0s max. @ 1.2A	600 W

Dimensions Function Modules

Type	Width	Heigth	Depth
TSP-REM360	35 (1.38)	110 (4.33)	110 (4.33)
TSP-REM600	54 (2.13)	110 (4.33)	110 (4.33)
TSP-BCM24	35 (1.38)	110 (4.33)	110 (4.33)
TSP-BCM24A	35 (1.38)	110 (4.33)	110 (4.33)
TSP-BFM24	54 (2.13)	110 (4.33)	110 (4.33)

Dimensions Battery Packs

Type	Width	Heigth h	Depth
TSP-BAT24-034	137 (5.39)	140 (5.51)	76 (2.99)
TSP-BAT24-072	133 (5.24)	157 (6.18)	110 (4.33)
TSP-BAT24-120	199 (7.83)	157 (6.18)	110 (4.33)

() = Inches

TIS Series ► 50 to 600 W

CE CB Scheme c UL us UL 60950-1 UL 508

- Low profile metal casing
- Standard models with 12, 24, 48 and 72 VDC
- For system applications expandable with built-in function modules (see next page)
- Adjustable output voltage
- Overload protection
- Worldwide safety approvals

Specifications

Input voltage range	– 93–132 VAC / 187–264 VAC (user selectable) 50/60 Hz – TIS 50 models: 93–264 VAC (universal input) 50/60 Hz – TIS 500-124-230: 187–264 VAC 50/60 Hz – TIS 500-124-115: 93–132 VAC 50/60 Hz / 113 – 187 VDC
Line regulation	0.2 % max.
Load regulation	1.0 % max.
Ripple & noise	<50 mVpk-pk (20 MHz BW)
EMI suppression	EN 55011, class B, EN 55022, class B and FCC,level B
EMC immunity	EN 61000-6-2
Output current limitation	at 110 % of Iout max. (constant current)
Overvoltage protection	at 140 % of Vout nom.
Efficiency	90 % typ.
Operating temperature	–25°C to +70°C above 50°C derating 2%/K
Safety standard / approvals	cUL/UL 60950-1, UL 508C listed, UL 1604 listed (except for models with options), IEC/EN 60950-1, CB-report
Connection	detachable screw terminals (plugs included) (TIS 600 models: screw terminal blocks)
Casing	stainless steel, aluminium
Mounting	snap-on mounting on 35 mm DIN-Rail or chassis mounting
Note	Output current characteristics suitable for battery charging applications
Full datasheet	www.tracopower.com/products/tis.pdf

Models

Order code	Output power max.	Output voltage (adjustable range)	Output current max.
TIS 50-112	50 Watt	12 VDC (12–14 VDC)	3.5 A
TIS 50-124		24 VDC (24–28 VDC)	2 A
TIS 75-112		12 VDC (12–14 VDC)	6 A
TIS 75-124	75 Watt	24 VDC (24–28 VDC)	3 A
TIS 75-148		48 VDC (48–52 VDC)	1.5 A
TIS 150-124	150 Watt	24 VDC (24–28 VDC)	6 A
TIS 150-148		48 VDC (48–52 VDC)	3 A
TIS 300-124		24 VDC (24–28 VDC)	12 A
TIS 300-148	300 Watt	48 VDC (48–52 VDC)	6 A
TIS 300-172		72 VDC (60–76 VDC)	4.2 A
TIS 500-124-230	500 Watt	24 VDC (24–28 VDC)	20 A
TIS 500-124-115		24 VDC (24–28 VDC)	20 A
TIS 600-124		24 VDC (24–28 VDC)	24 A
TIS 600-148	600 Watt	48 VDC (48–52 VDC)	12 A
TIS 600-172		72 VDC (60–76 VDC)	8.5 A

Wall mount brackets

MK-75	for 75 W models
MK-150	for 150 W models
MK-300	for 300 W models
MK-500	for 500 W models
MK-600	for 600 W models

Dimensions

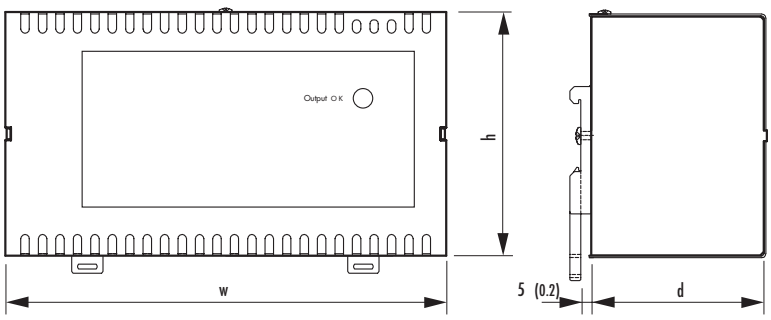

Type	Width w	Heigth h	Depth d
TIS 50	75 (2.95)	100 (3.94)	56.7 (2.23)
TIS 75	90 (3.54)	114.6 (4.51)	56.7 (2.23)
TIS 150	157 (6.18)	114.6 (4.51)	56.7 (2.23)
TIS 300	207 (8.15)	114.6 (4.51)	83.0 (3.27)
TIS 500	220 (8.66)	130 (8.66)	83.0 (3.27)
TIS 600	243 (9.57)	177.2 (6.98)	83.0 (3.27)

() = Inches

TIS Series ► Models with extended Functions

- Additional functions for system applications in process automation, machine tools, etc.
- Basic TIS series power supplies extended with one of the following integrated functions:
  - True N+1 redundancy operation
  - AC-power fail, DC-OK signal and remote On/Off
  - Battery controller to configurate a DC-backup system

Specifications

Redundancy function (RED)

With this function it is possible to parallel up to 5 power supplies with active current sharing for true N+1 operation. De-coupling diodes (OR-ring diodes) and also alarm output to signal a unit failure are included in this option.

Alarm output function (SIG)

Provides 3 functions: AC-Power fail signal and DC-OK signal, both with isolated relay contacts. In addition a remote On/Off input is available to control the power supply.

Back-up battery controller (UDS)

With this function, a professional battery management system to charge and monitor an external battery is added to the basic power supply. In case of a power failure the battery is switched automatically and without any interruption to the DC-output.
Power fail and low battery alarm signals are available.
During normal operation battery status is checked periodically and the external battery is fully protected under any operation condition.

Battery Pack
The battery pack contains high quality, maintenance free lead-acid batteries with 3.2 Ah resp.
7.0 Ah capacity fixed together with a resetable fuse in a mounting frame. Together with models
TIS 300-124 UDS or TIS 600-124 UDS the battery pack provides a complete and reliable DC-UPS system.
Backup time depends on load current and battery capacity.

For further information and power supply specifications please refer to industrial power supplies TIS Series 50–600 Watt.

Download full datasheet at ► www.tracopower.com/products/tis.pdf

Models

Order code*	Output power max.	Output voltage max.	Output current max.
Models with Redundancy Function			
TIS 150-124 RED	150 W	24 VDC	6 A
TIS 150-148 RED	150 W	48 VDC	3 A
TIS 300-124 RED	300 W	24 VDC	12 A
TIS 300-148 RED	300 W	48 VDC	6 A
TIS 600-124 RED	600 W	24 VDC	24 A
TIS 600-148 RED	600 W	48 VDC	12 A
Models with Alarm Output Function			
TIS 150-124 SIG	150 W	24 VDC	6 A
TIS 150-148 SIG	150 W	48 VDC	3 A
TIS 300-124 SIG	300 W	24 VDC	12 A
TIS 300-148 SIG	300 W	48 VDC	6 A
TIS 600-124 SIG	600 W	24 VDC	24 A
TIS 600-148 SIG	600 W	48 VDC	12 A
Models with Battery Controller Function			
TIS 300-124 UDS	300 W	24 VDC	12 A
TIS 600-124 UDS	600 W	24 VDC	24 A
Battery Pack			
TIS 24-32 AP		24 VDC	3.2 Ah
TIS 24-70 AP		24 VDC	7 Ah

* oder code for power supply with built in function module and terminal plugs

Power Conversion Glossary

A **Ambient Temperature** — The temperature of still air in the immediate surrounding of a power supply or converter. The temperature measurement should be made about 100 mm (4 inch) from the body of the converter or underneath of the power supply. See also **Operating Temperature**.

ATEX — ATEX 94/9/EC is an European Directive which provides the technical requirements to be applied to equipment intended to use in potentially explosive atmospheres. It is named after the French «**AT**mosphere **EX**plosible».

B **Base Plate** — A substrate to which circuit components are mounted or, a metal plate to which the power system is attached. Normally used to draw heat away from critical circuit components.

Basic Insulation — See **Insulation**

Boost Regulator — A switching converter topology in which an input inductor is used to store energy. This energy is transferred to the output when the shunt switch is turned off. The boost regulator will take an unregulated input voltage, and produce a higher, regulated output voltage.

Breakedown Voltage — See **Isolation Voltage**

Bridge Converter — A switching converter topology that employs four switching elements (full bridge) or two switching elements (half bridge). Bridge converters provide high output power and low ripple, but are significantly more complex than other types of converter topologies.

Burn-In — The operation of newly manufactured power supplies or converters under load conditions for a period of time prior to shipment. The intent is to eliminate infant mortality of components. The time period and conditions (input power cycling, load switching, temperature, etc.) will vary from product to product.

C **Case Temperature, max** — The maximum temperature for safe operation of the power supply or converter case. Often used as a specification for DC/DC converters with extended temperature ranges, case temperature is also referred to as base plate temperature.

CB-Report — Document necessary for the mutual recognition of approvals between different national safety test standards. http://www.cbscheme.org/

CE Marking — The mark consists of the letters CE (**C**ommunaute **E**uropeen, European Committee) and indicates compliance with all relevant EC-directives which concern the marked product. It means that the natural or juristic person which executed or ordered marking has made sure that the goods comply with all harmonised directives and has passed all conformity testing procedures required.

CENELEC — The "Comité pour Européen de Normalisation Électronique" (European Committee for Electrotechnical Standardisation) is a technical committee that recommends standards for adoption by the European Community (EC). These standards (referred to in the applicable EC directive issued by the committee) cover EMI/RFI interferences, intrinsic

safety, immunity, etc. http://www.cenelec.org/Cenelec/Homepage.htm

Chassis Ground The voltage potential of the chassis or enclosure surrounding a power system.

Clearance Distance The shortest distance (through air) separating two conductors or circuit components.

Common A conductive path used as a return for two or more circuits. Common is often used interchangeably with ground, which is not technically correct unless it is connected to earth.

Common-Mode Noise The component of noise which is common to both the DC output and returns lines with respect to an electrically fixed point, usually the chassis ground.

Constant Current A power supply or converter that regulates its output current to within a specified range regardless of changes in output load, input line and ambient temperature.

Constant Current Limiting Current-limiting circuit that holds output current at some maximum value whenever an overload of any magnitude is experienced. **See graph 1.**

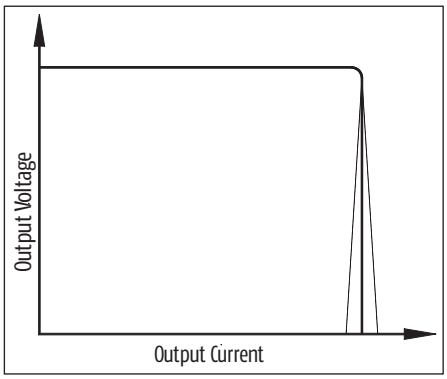

Graph 1: Constant Current Limiting

Continuous Shield see **Six-Sided Shielding.**

Convection Cooling The dissipation of heat via still air. (in contrary to **Forced Air Cooling**)

Creepage Distance The shortest distance between two conductors (typically one conductor primary and one conductor secondary).

Cross Regulation In a multiple output power supply or converter, the percent voltage change at one output caused by the load change on another output.

CSA **C**anadian **S**tandards **A**ssociation. An independent Canadian organisation testing for public safety, similar to the function of Underwriters Laboratories (UL) in the United States.
http://www.csa-international.org/

Current Limiting A circuit feature that protects the power supply or DC/DC converter (or load) from damage under overload condition. The maximum power supply or CD/DC converter output current is automatically limited to a predetermined, safe value. If the power supply or DC/DC converter is specified for auto restart, normal operation is automatically restored when the overload condition is removed.

Current Limit Knee On a plot of output voltage vs. output current, the point at which at which current begins to limit or foldback.

Current Share Multiple power supplies or DC/DC converters are often connected redundantly (to increase system reliability) or in parallel (to increase system power). When connected in this way, their outputs are connected together and each power supply or DC/DC con-

verter supplies approximately an equal «share» of the load current.
Current sharing can be achieved with external passive circuits (by synchronising multiple power supplies or DC/DC converters and trimming their outputs within a very tight error band) or active circuits (power supplies or converters that feature internal circuits to monitor and adjust output load current). The most popular redundant topology is the «N+1» circuit.

D

DC/DC-Converter

A device that accepts a DC input voltage and produces a DC output voltage. Typically the output produced is a different voltage level than the input. However, converters sometimes have the same input/output voltage, and are used to provide potential isolation, noise isolation, power bus regulation, etc.

Derating

The specified reduction of an operating parameter for safe and reliable operation. Generally for power supplies and DC/DC converters, it is the reduction of the output current at elevated temperatures. **See graph 2.**

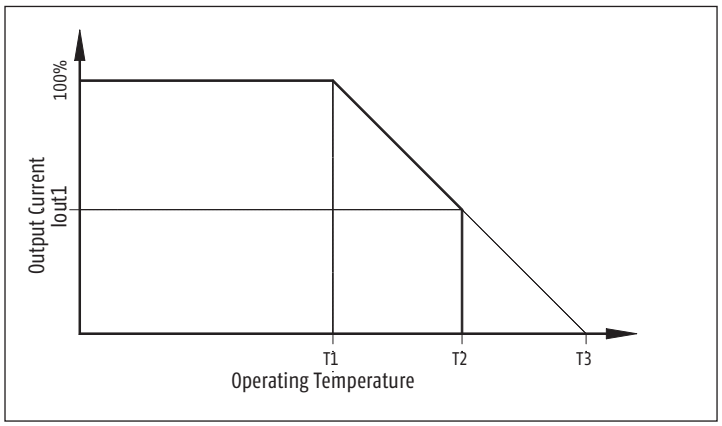

Graph 2: Derating

Differential Mode Noise

That component of noise measured with respect to output or input to its returns; it does not include common-mode noise. **See Ripple and Noise.**

Drift

The change in output voltage of a power supply or DC/DC converter over a specified period of time, following a warm-up period, with all other operating parameters such as line, load and ambient temperature held constant.

Dynamic Current Allocation

A system for dual positive output power supplies or DC/DC converters where the full rated max. current may be taken from either output in whatever combination is required.

Dynamic Load

An output load that changes rapidly. Normally specified as a load change value during a specified period of time.

Dynamic Response

The output overshoot that occurs when the output load of a power supply or DC/DC converter is turned on/off or abruptly changed. This overshoot defines the high frequency output impedance of the converter.

E

Efficiency

The ratio of total output power to input power expressed in percent. It is normally specified at full load and nominal input voltage.

Electrical Strength

See **Working Voltage**

EMC

Electromagnetic Compatibility, relating to compliance with electromagnetic emissions and susceptibility (immunity) standards.

EMI

Electromagnetic Interferences are electronic disturbances that may interrupt, disturb or otherwise impair the performance of electronic equipment.

EMI Filter

Switch mode power supplies and most DC/DC converters are filtered by using an EMI filter on the input or primary side to be compliant with applicable EMC standards. When power supplies or converters are used in «real» situations, driving active electronic circuits, especially those featuring high speed and/or high power switching, the characteristic of the interferences generated can change dramatically, thereby reducing the effectiveness of the EMI-filter. It is the final equipment as an entity, that is required to conform to the regulations, not the individual internal sub assemblies, like power supplies or converters. So, specifying a power supply or converter which meets the EMI classes does not remove the need for testing of the completed equipment for conformity. The employment of EMI compliant power supplies or converters is not a guarantee of system compliance.

EMI conducted

Conducted EMI is unwanted high-frequency energy caused by the switching transistors, output rectifiers, and transformers in switching power supplies and DC/DC converters and reflected back into the power line. That portion that is present on the input and output lines is known as Conducted EMI. Most Conducted EMI measurements are done between 150 kHz and 30 MHz.

EMI radiated

Radiated EMI is unwanted high-frequency energy caused by the switching transistor, output rectifiers, and zener diodes in switching power supplies and DC/DC converters and emitted into the area surrounding a power supply or DC/DC converter. That portion that is radiated through space is known as Radiated EMI. Most Conducted EMI measurements are done between 30 MHz and 300 MHz or 30 MHz and 1 GHz.

ESD

Electrostatic Discharge. ESD is the current produced by two objects having a static charge when they are brought close enough to produce an arc or discharge.

ESR

Equivalent Series Resistance. The amount of resistance in series with an ideal (loss less) capacitor, which exactly duplicates the performance of a real capacitor. In general, the lower the ESR, the higher the quality of the capacitor and the more effective it is as a filtering device. ESR is a prime determinant of ripple in switching power supplies.

F

Faraday Shield

An electrostatic shield between input and output windings of a transformer. This can be used to reduce coupling capacitance, which in turn reduces output common mode noise.

FCC

The **F**ederal **C**ommunications **C**ommission is a US government agency that sets standards for, and governs the testing of conducted and radiated emissions. These are system level standards, but they are also used in power supplies and DC/DC converter specifications.

Floating Output

A power supply or DC/DC converter output that is ungrounded and not referenced to another output. Typically, floating outputs are fully isolated and may be referenced positive or negative by the user. Outputs that are not floating share a common return and as such, are referenced to one another.

Flyback Converter

Also called «Buck-Boost» converter, this topology typically uses a single transistor switch and eliminates the need for an output inductor. Energy is stored in the transformer primary during the first half of the switching period when the transistor switches «ON». During the second half of «Flyback period when the transistor is OFF», this energy is transferred to the transformer secondary and load. This technique is cost effective because of a minimum number of components required.

Foldback Current Limiting A power supply or DC/DC converter output protection circuit whereby the output current decreases with increasing overload, reaching a minimum at short circuit. This minimises the internal power dissipation under overload conditions. **See graph 3.**

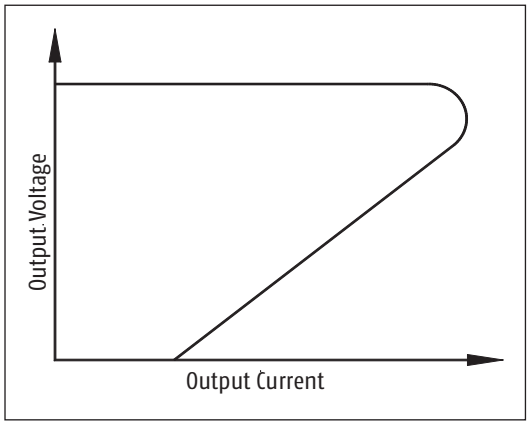

Graph 3: Foldback Current Limiting

Forced Air Cooling The use of a fan (or other air moving equipment) within a system to move air across heat producing components in order to reduce the ambient temperature.

Forward Converter Also called a «Buck-Derived» converter, this topology, like the flyback converter, typically used a single transistor switch. Unlike the flyback converter, energy is transferred to the transformer secondary while the transistor is «ON», and stored in an output inductor.

Free Convection An operating environment in which the natural movement of air (unassisted by fans or blowers) is sufficient to maintain the power supply or DC/DC converter within its operating limits. See also **Convection Cooling.**

Full Bridge Converter A topology that typically operates as a forward converter but uses a bridge circuit, consisting of four switching transistors, to drive the transformer primary, used to handle high power levels.

Full Load The maximum value of output load specified for a power supply or DC/DC converter under continuous operating conditions.

Full Wave Rectifier A circuit (bridge or centre tapped) that rectifiers both halves of an AC waveform.

G

Galvanic Isolation Two circuits which have no ohmic connection are considered to be «galvanically isolated» from each other. Galvanic isolation (separation) is achieved by using a transformer, opto-coupler, etc.

Ground An electrical connection that is made to earth (or to some conductor that is connected to earth). A power supply or DC/DC converter «common» is not actually ground unless it is connected to earth.

Ground Loop An unwanted feedback condition caused by two or more circuits sharing a common electrical line, usually a common ground line. Voltage gradients in this line caused by one circuit may be capacitively, inductively, or resistively coupled into the other circuits via the common line.

H

Half Bridge Converter A power switching circuit similar to the full bridge converter except that only two transistors are used, with the other two replaced by capacitors.

Half-Wave Rectifier Single-diode rectifier circuit that rectifiers one-half the AC input wave.

Harmonic Distortion

For sinusoidal AC current waveforms, the distortion characterise by the present of multiple harmonics of the fundamental frequencies. This distortion is caused by the switching action of the power supply.

Heat-Sink

A metal plate, extrusion, case, etc. that is used to transfer heat away from sensitive components and/or circuits.

Hicc-up Mode

Also called Cycle-to-Cycle Mode. An operating mode triggered by an output fault condition (short circuit) in which the power supply or DC/DC converter cycles on and off. The duty cycle of on time to off time maintains the internal power dissipation at a safe level until the fault condition is corrected.

Hold-Up Time

The time during which a power supply's or DC/DC converter's output voltage remains within specification following the loss of input power.

IEC

International **E**lectrotechnical **C**ommission. The IEC is an organisation based in Switzerland (Geneva) that sets standards for electronic products and components. IEC does not conduct any testing, however, their standards have been adopted by most of worldwide national safety agencies.
http://www.iec.ch/

Input Transient

A spike or step change in the input line to a power supply or DC/DC converter. Input transient protection circuits are used to shield sensitive components (such as semiconductors)from possible damage due to transient voltages.

Input Voltage Range

The high and low input voltage limits within which a power supply or DC/DC converter may be operated. A common specification for DC/DC converters is to specify the ratio of high line to low line (i.e. a range of 2:1 for 18VDC to 36VDC or a range of 4:1 for 18VDC to 72VDC).

Inrush Current

A high surge of input current that occurs in power supplies, DC/DC converters, switchers and occasionally in linears upon initial turn on, caused by charging of the input capacitors. Also called Input Surge Current. **See graph 4.**

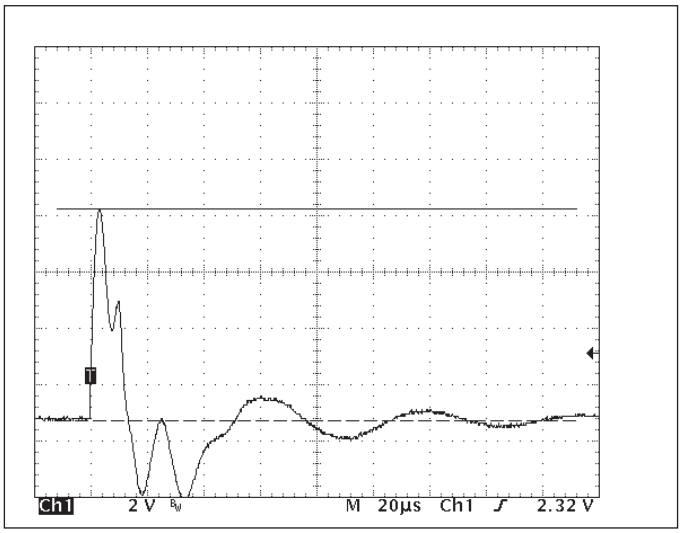

Graph 4: Inrush Current

Inrush Current Limiting

A circuit which limits the inrush current during turn-on of a power supplies and DC/DC converters.

Insulation

Operational Insulation: Insulation needed for proper operation of a power supply or converter. Operational Insulation by definition does not protect against electrical shock.

Basic Insulation: Insulation to provide one layer of "basic protection" against electrical shock.

Supplementary Insulation: Second layer of insulation applied in addition to Basic Insulation in order to ensure protection against electrical shock in the event of a failure of the Basic Insulation.

Double Insulation: Insulation comprising both Basic Insulation and Supplementary Insulation.

Reinforced Insulation: A single insulation system which provides a degree of protection against electric shock equivalent to Double Insulation under the conditions specified in the applicable standards. Note: The term «insulation system» does not imply that the insulation has to be in one homogeneous piece. It may comprise several layers which cannot be tested as supplementary or Basic Insulation.

Insulation Resistance

The resistance offered by an insulating material to current flow.

Internal Power Dissipation

The power dissipated (as heat) within the power supply or DC/DC converter during normal operation. Primarily a function of the power handling capability and efficiency of the power supply or DC/DC converter. Internal power dissipation is given as a maximum specification that cannot be exceeded without risking damage to the power supply or DC/DC converter.

Inverter

A device that delivers AC power when energised from a DC power source. Inverters may be frequency, amplitude, or pulse-width modulated to vary output voltage.

Isolation

The electrical separation between input and output of a power supply or DC/DC converter by means of the power transformer. The isolation resistance (normally in megaohms) and isolation capacitance (normally in picofarads) are generally specified and are a function of materials and spacings employed throughout the power supply or DC/DC converter.

Isolation Test Voltage

The voltage test to determine if the breakdown voltage of a transformer, power supply or DC/DC converter exceeds the minimum requirements. It is performed by applying a high voltage between the two isolated test points. In production the isolation of a power supply or DC/DC converter will be tested for a time period of 1 to 6 seconds max. (according to EN 50116) in order not to cause stress to the insulation material.

Isolation Voltage (rated)

Rated Isolation voltage is defined as the maximum voltage across the isolation barrier (i.e. input to output for converters or primary to secondary for power supplies and transformers) a device can withstand for a fixed time period. Normally this time period is specified with 60 seconds (according to UL/EN/IEC 60950).
The actual breakdown voltage is typically in excess of 1000V higher than the rated isolation voltage. The reason for rating a conservative isolation voltage is to ensure that the isolation testing of a power supply or converter does not degrade the isolation barrier in any way.

L

Leakage Current

The current flowing from input to output or input to ground/chassis or output to ground/chassis of an isolated power supply or DC/DC converter at a specified voltage level.

Line Regulation The variation of an output voltage due to a change in the input voltage, with all other factors held constant. Line regulation is expressed as the maximum percentage change in output voltage as the input voltage varied over its specified range.

Line Voltage The AC input voltage to a power supply or the DC input voltage to a DC/DC converter.

Load The electronic components or circuitry connected to the output of a power supply or DC/DC converter. The characteristic (resistance, reactance, etc.) of the load determines the amount of power drawn from the power supply or DC/DC converter. For voltage regulated power supplies and DC/DC converters, the load is the output current.

Load Regulation Variation of the output voltage due to a change in the output's load within a specified range with all other factors held constant. The load change may be specified for other than no load to full load such as 20 % load to full load or 10 % load to 90 % load and it is expressed as a percentage of the nominal DC output voltage.

Load Sharing See **Current Share.**

M

Maximum Operating Temperature The maximum ambient temperature at which a power supply or DC/DC converter will operate without risk of damage.

Maximum Rating Limit of specifications that, if exceeded, could cause permanent damage to power supplies and converters. These are not continuous ratings, and proper operation is not implied.

Minimum Load The minimum amount of output load required maintaining normal continuous operating specifications. Usually associated with PWM (Puls Width Modulation) controlled power supplies or DC/DC converters.

Minimum Operating Temperatur The minimum temperature at which the power supply or DC/DC converter will start up.

MTBF The Mean Time Between Failure is a unit of measure, expressed in hours, that gives an indication of the relative reliability of a power supply or DC/DC converter. MTBF is based upon actual operating data (demonstrated) or derived per the conditions of IEC 61709 standard (calculated). Traco Electronic AG calculates MTBF values for their products in general for ground benign and at +25 ° C ambient. MTBF is not a specification for the lifetime of a product.

N

N+1 A power system technology used to achieve higher reliability levels trough system redundancy. The system consists of a number of power supplies or DC/DC converters connected in parallel, sharing the power drawn by the system load. One more power supply or DC/DC converter than is necessary to provide full load current is used (i.e. for a 600 W load, three 300 W power supplies are used). Thus, if any single power supply or DC/DC converter fails, the remaining ones will continue to supply current to the load.

Natural Convection See **Free Convection.**

Noise Noise is the aperiodic, random component of undesired deviations in output voltage. Normally called Ripple and Noise and given as a peak-to-peak value with a specified bandwidth (typically 20 MHz). See also **Ripple and Noise.**

Nominal Value Stated or objective value for a quantity, such as output voltage, which may not be the actual value measured.

O

Open Frame A construction of power supplies or DC/DC converters, which are not encased in a metal or plastic casing and are not covered with a potting compound.

Operating Temperature Range The range of temperatures within which a power supply or DC/DC converter will perform within specified operating parameters.

OR-ing Diodes Also called decoupling diodes. Diodes, that isolates a faulty power supply or DC/DC converter from the load or other power supplies or DC/DC converters. Typically, these diodes are used externally in the output circuit of a power supply or DC/DC converter.

Output Voltage Accuracy The maximum allowed deviation of the DC output of a power supply or DC/DC converter from its ideal or nominal value. Expressed as a percentage of output voltage. Often called output voltage tolerance.

OTP Over Temperature Protection. A protection system for power supplies or DC/DC converters where the power supply or DC/DC converter shuts down if the ambient temperature exceeds the ratings. OTP is intended to save the power supply or DC/DC converter in the event of a failure of the cooling system. OTP usually measures the hottest spot in the power supply or DC/DC converter rather than the ambient temperature.

Overload Protection See **Current Limiting.**

OVP Over Voltage Protection. A protection mechanism for the load circuit which shuts down the supply or crowbars or clamps the output, when its voltage exceeds a preset level.

P

Parallel Operation The connection of the outputs of two or more power supplies or DC/DC converters of the same output voltage to obtain a higher output current than from either power supply or DC/DC converter alone. This requires power supplies or DC/DC converters specifically designed to share the load.

Peak Output Current The maximum peak current that can be delivered to a load during transient load conditions, such as electric motor starts.

Pi-Filter A commonly used filter at the input of a switching power supply or DC/DC converter to reduce reflected ripple current. The filter usually consists of two parallel capacitors and a series inductance.

Planar Transformer Planar transformers use a construction technology to replace conventional wire windings in transformers and inductors with patterned conductors formed on single or multilayer substrates.

Power Density The ratio of a power supply or DC/DC converter output power to its volume.

Power Factor In a power supply, the ratio of true input power to apparent input power. In these circuits, power factor is a measure of the input current that is in phase with the input voltage and thus constributing to the average power.

Power Factor Correction (PFC) Standard power supplies draw line current in pulses around the peaks in line voltage. This may be undesirable for several reasons. PFC circuits ensure that the line current is drawn sinusoidal and in phase with the sinusoidal line voltage. This reduces the harmonics distortion of the power supply and increases the useful power drawn from the mains. PFC circuits can be active or passive.

Power Fail Detect A circuit that senses the DC voltage across the input capacitors of a switching power supply. Should the AC input line fail, it senses an abnormally low DC level across the capacitors and provides an logic output signal warning of imminent loss of output power.

Power Good Signal A signal that indicates the status of the DC output of the primary channel of a power supply or a DC/DC converter. Also called DC-OK.

Puls Width Modulation A circuit used in switching power supplies or DC/DC converters where the switching frequency is held constant and the width of the power pulses is varied, controlling both line and load changes with minimal dissipation.

Push-Pull Converter A converter topology that typically is configured as a forward converter but uses two transistor switches and a centre tapped transformer. The transistor switches turn on and off alternately.

R

Redundant Operation The ability to connect power supplies or DC/DC converters in parallel so that if one fails the other will provide continuous power to the load. This mode is used in systems when a power supply or a DC/DC converter failure cannot be tolerated. See also **N+1 Redundancy.**

Reflected Ripple Current The AC component generated at the input of a power supply or DC/DC converter by the switching operation of the converter, stated as peak-to-peak or RMS. See **graph 5.**

Remote Sensing A method of moving the measuring point for the regulation from the output terminals to the load. Compensates voltage drops in the power distribution bus, but negative impact on dynamic load behaviour must be tolerated.

Reverse Voltage Protection A feature, which protects a power supply or DC/DC converter against a reverse voltage, applied at the input or output terminals.

Ripple The periodic AC noise component of the power supply or DC/DC converter output voltage. **See graph 5.**

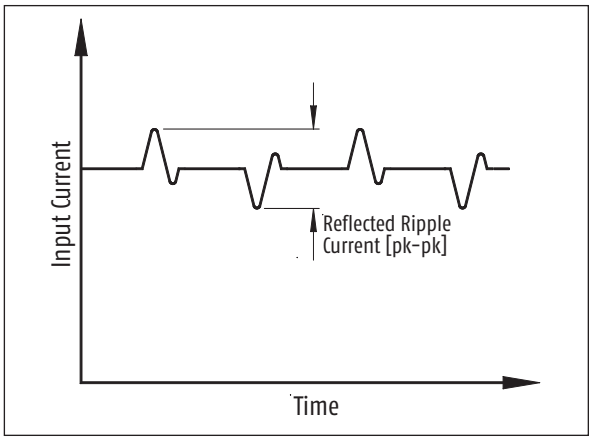

Graph 5: Reflected Ripple Current

Ripple and Noise

The magnitude of AC voltage on the output of a power supply or DC/DC converter, expressed in millivolts peak-to-peak or RMS, at a specified band width (typically 20MHz). This is the result of the feed through of the rectified line frequency, internal switching transients and other random noise. **See graph 6.**

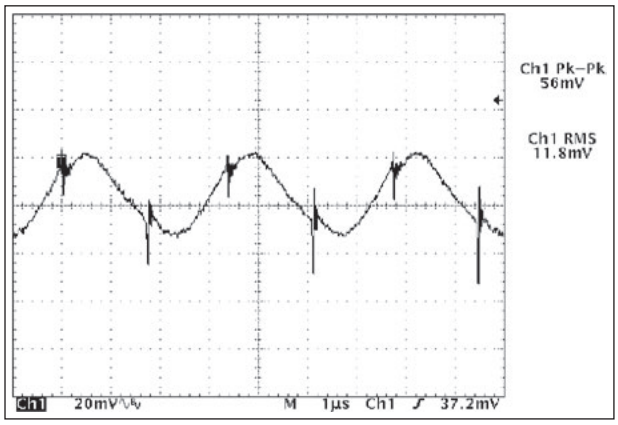

Graph 6: Ripple and Nois

RoHS Directive

This European Directive (2002/95/EC) specifies the maximum concentration of lead and 5 other hazardous substances for 10 categories of electronic products listed in this Directive. Component (built-in) power supplies and DC/DC converter products are not falling under this Directive by law.
http://europa.eu.int/eur-lex/pri/en/oj/dat/2003/l_037/l_03720030213en00190023.pdf

S

Safety Class II

The safety class II symbol specifies a power supply product which is double insulated and due to that no protective earth connection is available nor needed. That means that the product is designed with two layers of insulations between hazardous voltage and accessible parts.

SELV

Safety Extra Low Voltage. A term used by safety regulatory body (IEC,UL, CSA, CENELEC, etc.) to describe the highest voltage level (single fault condition included) than can be contacted by a person without causing injury. It is usually defined as 60VDC or 42.4Vpk max..

Sense Lines

An output line used in «Remote Sensing» connection to route the output voltage (at the load or direct on the power supplies or DC/DC converters output) back to control feedback loop. See **Remote Sensing.**

Short Circuit Protection

A feature, which limits the output current of a power supply or DC/DC converter under short circuit conditions, so that the power supply or DC/DC converter will not be damaged.

Six-Sided Shielding

A construction technique in which the circuit is placed into a metal case. This metal shielding minimises any noise radiation from the converter components. A continuous shielded case has the base (or header) welded together, further reducing potential noise leakage.

Soft Start

A feature which limits the start-up switching current (inrush current) of a switching power supply or DC/DC converter and causes the output voltage to rise gradually to its final value.

Standby Current

The current drawn by a power supply or DC/DC converter when it is no load and/or has been shut down by a control signal.

Still Air An operating environment in which the air surrounding the power supply or DC/DC converter is restricted in small enclosures (often sealed) where it cannot move freely.

Storage Temperature Temperature range within a power supply or DC/DC converter can be safely stored, non-operating, with no damage to its components.

Surface Mount Technology (SMT). A space saving technique whereby special leadless components are soldered onto a surface of a PCB.

Switching Frequency The rate at which the DC voltage is switched in a DC/DC converter or switching power supply.

Switching Regulator A high-efficiency non-isolated DC/DC converter consisting of inductors and capacitors to store energy and switching elements (typically transistors or SCR's), which open and close as necessary to regulate voltage across the load. The switching duty cycle is generally controlled by a feedback loop to stabilise the output voltage, generally by means of a Pulse-Width Modulation.

Synchronous Rectifiers A circuit arrangement where the output rectifier diodes of a power supply or DC/DC converter are replaced with active switches such as MOSFET's. The switches are turned on and off under control and act as rectifier. This results in considerably lower losses in the output stage and subsequently much higher efficiency. They are particularly useful with low voltage outputs.

T

Temperature Coefficient The average percent change in output voltage per degrees centigrade change in ambient temperature over a specified temperature range, with load and input voltage held constant.

Transient Recovery Time The time required for the output voltage of a power supply or DC/DC converter to settle within specified output accuracy limits following a step change in output load current or a step change in input voltage.

U

UL listing Mark The UL listing mark shows that the whole equipment is approved by UL according to the relevant US safety standard requirements. If a product or equipment is carrying the UL listing mark no additional testing by UL is required. UL will only investigate if the product or equipment is used according to the manufacturers published specifications which has to comply with the UL test report. The «c» in the UL listing mark means that the product complies with relative Canadian safety standards as well.

UL recognition Mark The UL recognition mark shows that the product is recognised as a component and has been approved by UL according to the relevant US safety standard requirements. The «c» in the UL listing mark means that the product complies with relative Canadian safety standards as well.

UL Underwriter Laboratories, an independent, non-profit organisation testing for public safety in the United States. UL recognition or listing is required for equipments used in specific applications.
http://www.ul.com/

Universal Input An AC input to a power supply that accept all the standard voltage levels available from the mains. Typically specified at 85 VAC to 264 VAC (100, 110, 230 and 240 VAC).

UPS

Uninterruptible Power Supply. A system designed to supply power in the event of temporary or permanent loss of AC line power. This is accomplished by means of a back-up battery and a DC/AC inverter or DC/DC converter.

Under Voltage Lockout

A protection system for power supplies or DC/DC converters where the power supply or DC/DC converter is deliberately shut down if the input voltage drops below a predefined level. Some hystereses is usually present to prevent the power supply or DC/DC converter oscillating on and off. Under voltage lockout is usually needed with battery systems where the voltage decreases gradually with the time rather than snaps off quickly.

V

Voltage Balance

The difference in magnitude, in percent, between the two output voltages of a dual output power supply or DC/DC converter where the voltages have equal nominal values with opposite polarities.

W

Warm-up Time

The time required, after initial turn-on, for a power supply or DC/DC converter to operate within its specifications.

Working voltage (rated)

Rated working voltage or electrical strength is the maximum continuous voltage that can be sustained continuously across the isolation barrier of a power supply or converter without causing stress to the isolation barrier. The rated working voltage is typically much lower than the rated isolation voltage. To define the max. working voltage from a specified isolation voltage is difficult since it depends much on the material and construction of the insulation. A relative conversion table can be found in the IEC/EN/UL 60950-1 safety standard.

TRACO®
POWER

TRACO ELECTRONIC AG
1, Jenatschstrasse · P.O. Box
CH-8027 Zurich · Switzerland
Tel. +41 43 311 4511 · Fax +41 43 311 4545
info@traco.ch · www.tracopower.com